Control # - 106637 Control Date - 05/15/2000
Mfg - DATRON
Model/Series - 1062, 1061A, 1061
Document Type - Calibration & Servicing Handbook
Note - Digital Multimeter

CALIBRATION AND SERVICING HANDBOOK

1062
1061A 1061

datron
INSTRUMENTS

digital multimeter

CALIBRATION AND SERVICING HANDBOOK

for

THE DATRON AUTOCAL 1062, 1061A and 1061 DIGITAL MULTIMETERS

(The calibration and servicing information in this Handbook applies equally to the Autocal instruments 1061, 1061A and 1062.
For operating procedures refer to the User's Handbook.)

850045 Issue

For any assistance contact your nearest Datron Sales and Service center.
Addresses can be found at the back of this handbook.

Due to our policy of continuously updating our products, this handbook may contain minor differences in specification, components and circuit design to the instrument actually supplied. Amendment sheets precisely matched to your instrument serial number are available on request.

© 1984 Datron Instruments

CONTENTS

GENERAL DESCRIPTION ....
INSTALLATION .... } Refer to
MEASUREMENT PROCEDURES ....
SPECIFICATION AND SPECIFICATION VERIFICATION .... } User's Handbook
SYSTEMS APPLICATIONS ....

Section	Title	Page
1	CALIBRATION	1
1.1	INTRODUCTION	1
1.1.1	General	1
1.1.2	Essentials for Good Calibration	1
1.1.3	The 'AUTOCAL' Process	1
1.2	DC VOLTAGE CALIBRATION	2
1.3	OHMS CALIBRATION	4
1.4	AC VOLTAGE CALIBRATION – OPTION 10 ONLY.	6
	– OPTION 12 ONLY.	7A
1.5	DC CURRENT CALIBRATION	8
1.6	AC CURRENT CALIBRATION	9
1.7	'AUTOCAL' USING 'KEYBOARD'	10
1.8	'AUTOCAL' OVER THE BUS	11
2	MECHANICAL DESCRIPTION	13
2.1	GENERAL	13
2.2	FRONT PANEL	13
2.3	REAR PANEL	13
2.4	EXTERNAL CONSTRUCTION	13
2.5	INTERNAL CONSTRUCTION	13
3	TECHNICAL DESCRIPTION	15
3.1	INTRODUCTION	15
3.2	ANALOG ASSEMBLY	15
3.2.1	Analog Interface	15
3.2.1.1	Introduction.	15
3.2.1.2	Power-On.	15
3.2.1.3	General Interface Update Sequence.	17
3.2.1.4	Test	17
3.2.2	DC Isolator Section	17
3.2.2.1	Preamplifier Scaling	17
3.2.2.2	Preamplifier	20
3.2.2.3	DC Bootstrap	20
3.2.2.4	Filtering	20
3.2.2.5	Input Current Compensation	21
3.2.2.6	Test	21
3.2.3	Analog to Digital Conversion (Analog Section)	21
3.2.3.1	General Principles	21
3.2.3.2	A-D Input Control	23
3.2.3.3	Reference Voltages and Control Logic Power Supply	23
3.2.3.4	High Speed Buffer	24
3.2.3.5	Integrator	24

Section	Title	Page
	3.2.3.6 1st Null Detector	25
	3.2.3.7 2nd Null Detector	25
	3.2.3.8 Reset Period	25
3.3	OPTION 10 AC ASSEMBLY	27
	3.3.1 General Principles	27
	3.3.2 Preamplifier and Scaling	27
	3.3.3 RMS Converter	28
	3.3.4 High Frequency Compensation	29
	3.3.5 Frequency Detection	29
	3.3.6 Test	29
A3.3	OPTION 12 AC ASSEMBLY	A27
	A3.3.1 General Principles	A27
	A3.3.2 Preamplifier and Scaling	A27
	A3.3.3 RMS Converter	A28
	A3.3.4 High Frequency Compensation	A29
	A3.3.5 Frequency Detection	A29
	A3.3.6 Test	A29
3.4	OHMS ASSEMBLY	30
	3.4.1 Low Drift Voltage Follower	30
	3.4.2 Constant Current Source	30
	3.4.3 Test	31
3.5	CURRENT ASSEMBLY	31
	3.5.1 Current Measurements	32
	3.5.2 Test	32
3.6	REAR INPUT/RATIO INPUT	32
	3.6.1 General	32
	3.6.2 Front Panel/Rear Panel Input	32
	3.6.3 Ratio	32
	3.6.4 Test	33
3.7	ANALOG OUTPUT	33
	3.7.1 General	33
	3.7.2 Description	33
3.8	DIGITAL ASSEMBLY	33
	3.8.1 Processor and Memory	33
	3.8.1.1 Software Overview	34
	3.8.1.2 The Two-Phase Clock	35
	3.8.1.3 RAM/ROM Circuit	36
	3.8.2 CMOS Address Decode and Input/Output Circuits	36
	3.8.3 Analog to Digital Conversion (Digital Section)	39
	3.8.3.1 General Principle	39
	3.8.3.2 Preset Procedure	39
	3.8.3.3 A-D Measurement Sequence	41
	3.8.3.4 Master Clock and Line Locking	41

Section		Title	Page
	3.9	FRONT PCB ASSEMBLY	42
	3.9.1	Analog Input Signals	42
	3.9.2	Display Signals	42
	3.9.3	Keyboard Data Encode	42
	3.9.4	Keyboard LED Data Decode	43
	3.10	DISPLAY DRIVER ASSEMBLY	45
	3.10.1	Write Mode	45
	3.10.2	Read Mode	45
	3.11	IEEE DIGITAL INTERFACE	46
	3.11.1	ROM Circuit	46
	3.11.2	Interface Circuit	46
	3.12	BCD DIGITAL INTERFACE	47
	3.12.1	RAM/ROM Circuit	47
	3.12.2	Interface Circuit	47
	3.13	REAR (POWER SUPPLY) PCB ASSEMBLY	48
	3.13.1	General	48
	3.13.2	180V Supply	48
	3.13.3	5V Supply	48
	3.13.4	±15V Supply	48
	3.14	SELF TEST SEQUENCE	48
4		INTERNAL ADJUSTMENT PROCEDURES	51
	4.1	ALTERATION OF LINE VOLTAGE AND FREQUENCY	51
	4.1.1	Changing Line Voltage	51
	4.1.2	Changing Line Frequency	51
	4.2	BATTERY REPLACEMENT	51
	4.3	POST-REPAIR PROCEDURES	51
	4.3.1	Basic DC Instrument	52
	4.3.2	Ohms Assembly	53
	4.3.3	AC Assembly (Option 10)	54
	4.3.4	AC Assembly (Option 12)	55
	APPENDIX 1	ANALOG DATA LINE 'F.E.T.' PATTERNS	57

Section	Title	Page
5	COMPONENT LISTS, BOARD LAYOUTS AND CIRCUIT DIAGRAMS	
	Interconnection Diagram	430291
	Front PCB Assembly	400294/430294
	Rear PCB Assembly	400295/430295
	Centre PCB Assembly	400296/430296
	Left Hand PCB Assembly	400297/430297
	Right Hand PCB Assembly	400298/430298
	Current Assembly	400304/430304
	Ratio/Rear Input	400307/430307
	Analog Output	400308/430308
	Analog Assembly	400328/430328
	Digital Assembly	400329/430329
	Display Driver Assembly	400330/430330
	Ohms Assembly	400331/430331
	BCD Interface Assembly	400332/430332
	Rear Input	400386/430386
	AC Assembly (Option 10)	400402/430402
	IEEE Interface Assembly	400427/430427
	AC Assembly (Option 12)	400552/430552
	IEEE 488 Option kit	440082/83/84

ILLUSTRATIONS AND TABLES

Figure	Title	Page
1.1	Zero Resistance Source Connections	4
2.1	Exploded View of Instrument	14
3.1	Printed Circuit Boards Block Diagram	15
3.2	Power-On Options Fitted Test	16
3.3	Analog Interface Sequence: Power-Up	16
3.4	Analog Interface Data Line Timing Diagram (Power-Up)	16
3.5	Analog Interface Sequence: Ohms Select	17
3.6	General Form of Analog Interface Update Timing Diagram	18
3.7	Simplified Diagram of DC Isolator	18
3.8	Simplified Diagram of Isolator Switching	19
3.9	Preamplifier Gain Circuits	20
3.10	Simplified DC Isolator Filtering Circuit	21
3.11	Simplified Diagram of Bias Current Compensation	21
3.12	Simplified Diagram of Analog Section of A-D Converter	22
3.13	Timing Diagram For Analog Section of A-D Converter	22
3.14	Multiplexer Control Line Signals	23
3.15	Positive Reference Circuitry	23
3.16	High Speed Buffer Circuitry	24
3.17	Integrator Circuit	24

Figure	Title	Page
3.18	1st Null Detector Circuitry	25
3.19	2nd Null Detector Circuitry	25
3.20	Diagram of Averaging Process	26
3.21	Simplified Diagram of A-D During Reset Period	26
3.22	Simplified Diagram of AC Assembly	27
3.23	Simplified Diagram of the AC Preamplifier Scaling	28
3.25	Block Diagram of RMS Conversion Technique	28
3.26	Simplified Diagram of AC High Frequency Compensation	29
A3.22	Simplified Diagram of AC Assembly	A27
A3.23	Simplified Diagram of the AC Preamplifier Scaling	A28
A3.24	Simplified Diagram of AC Filters	A29
A3.25	Block Diagram of RMS Conversion Technique	A28
A3.26	Simplified Diagram of AC High Frequency Compensation	A29
3.27	Simplified Resistance Assembly	29
3.28	Simplified Diagram of Voltage Follower Circuit	30
3.29	Ohms Current Range Switching	30
3.30	Simplified Ω Current Switching	31
3.31	Use of Ohms Guard	31
3.32	Simplified Diagram of Current Assembly	32
3.33	Simplified Block Diagram of Digital Assembly	33
3.34	Job Scheduler	34
3.35	Two-Phase Clock Generation	35
3.36	Timing Diagram of Stretched Two-Phase Clock	36
3.37	Simplified Diagram of Memory Circuits	37
3.38	Start Up and Non-Volatile RAM Protection	38
3.39	CMOS Address Decoding	38
3.40	Simplified Diagram of Digital Section of A-D Converter	39
3.41	Flowchart of A-D Digital Section	40
3.42	A-D Analog Sequence Control Signals	40
3.43	Command Delays	40
3.44	Line Locking Timing Diagram	42
3.45	CMOS Data Bus : Key Select Coding	43
3.46	CMOS Data Bus : LED Select Coding	43
3.47	Display Driver Write Circuitry	44
3.48	Display Driver Read Mode Address States	44
3.49	Simplified Display Driver Read Circuitry	45
3.50	Simplified Diagram of IEEE Assembly	46
3.51	Simplified Diagram of BCD Interface Assembly	47
3.52	Line Transformer	48
3.53	Flowchart of Self Test Routine	49
4.1	Reference Selection Voltages	53
4.2	Option 10 AC Assembly Output Selection Voltages	54
4.3	Option 12 AC Assembly Output Selection Voltages	55

SECTION 1

CALIBRATION

1.1 INTRODUCTION

1.1.1 General

The purpose of calibration is to take account of any long-term drifts in the components of the instrument and to restore the accuracy, traceable to a known standard.

The period between calibrations depends upon the accuracy performance required from the instrument and for guidance, guaranteed accuracies for 24 hours, 90 days and 1 year are quoted.

The calibration procedures presented in the following pages should cater for most calibration situations. If, however, a special problem arises, please contact our Customer Service Section.

1.1.2 The Essentials for Good Calibration

Temperature - So that the instrument can meet its specification over the quoted temperature range, the temperature environment should be stabilised at 23°C ±1°C. In addition, temperature gradients around the instrument should be considered, therefore calibrate the instrument in its normal operating position and allow plenty of room for ventilation.

Warm up - It is essential that the instrument has fully temperature stabilised if the best results from calibration are to be achieved. Therefore, at least a 2 hour warm-up period is recommended during which time the line supply or the covers should not be removed even for a short period. In addition, if the covers have been removed, make certain that they are correctly fitted and that the leaf contacts to the Earth and Guard Shields are in good shape.

Calibration Source - To perform a useful calibration the accuracy of the source should always be at least four times that of the instrument being calibrated. In most cases, examples of likely sources are given for each calibration function.

With some calibration sources, the output may take several seconds to settle to a final value, therefore unless a shorter settling time is assured, a period of 10 seconds is recommended before each calibration operation.

Guarding - It is preferable to arrange for the DVM to be calibrated with 'Local Guard' selected. Furthermore to arrange for the 'Lo' terminal of the DVM to remain at 'earth' throughout and let the calibration source float. If a 'Remote Guard' connection is necessary then examples are shown in the Operating Manual.

1.1.3 The 'AUTOCAL' Process

1.1.3.1 General

The Datron 'AUTOCAL' process means that complete calibration of AC, DC, Ohms and Current on every range can be carried out from the instruments own front panel. In the process, an internal non-volatile memory stores calibration constants for each function and range as determined when the instrument takes a series of 16 readings of the applied calibration source. Internally, each of the readings is deviated by one sixteenth of a digit and when an average is taken, the instrument is able to resolve to better than one least significant digit displayed.

Access to the non-volatile memory is gained using a key inserted into the rear panel. When calibration is complete, the key is removed, therefore preventing accidental or unauthorised use of the calibration routine.

1.1.3.2 Procedure Outline

- Select the 'FUNCTION' and 'RANGE' to be calibrated and cancel any 'MODE' or 'COMPUTE' buttons.

Insert the key into the 'CALIBRATE ENABLE' keyswitch on the rear panel and turn to the 'CAL' position. (The 'cal' legend will be displayed on the front panel.)

If the instrument is fitted with Option 50 IEEE Bus, set the rear panel address switch to 31 i.e. all 1's.

- Connect the calibration source to the input terminals and operate the keys shown in the tables in the following pages. When a 'CALIBRATE' button is operated, its associated L.E.D. indicator will light and extinguish when the calibration operation is executed.

- When all calibration is complete turn the keyswitch to 'RUN' and remove the key.

1.1.3.3 The Five 'AUTOCAL' Keys

'Zero' - This takes account of offsets in the instrument and in the calibration source.

'Gain' - This sets a scaling factor for each range and function.

'Ib' - This nulls the input bias current of the DC voltage measurement circuits to around 10pA. Therefore it only has a significant effect on the low DC voltage ranges and high resistance Ohms ranges. It can be operated as often as required and independently of other calibration operations. It will be seen that successive operations of 'Ib' approach the final nulled value of current iteratively.

'AcHf' - This flattens the response of the A.C. amplifier used for AC voltage measurement. It should only be used when a full calibration i.e. 'Zero', 'Gain' and 'AcHf' is carried out. As with 'Ib' the calibration action is iterative and requires several operations of the key to complete.

'Lin' - This is an important calibration operation as it optimises the basic linearity of the internal measurement circuitry used for all ranges and functions. It must be used before any DC voltage or Ohms calibration is carried out.

1.1.3.4 'AUTOCAL' using 'KEYBOARD'

This is an extension of the 'AUTOCAL' process which is useful when using a calibration source set to a nominal value but with known errors. This means for example that calibration directly to a standard cell is possible. A full explanation of the procedure is covered in section 1.7.

1.1.3.5 'AUTOCAL' over the Bus

Each of the five calibration operations can be controlled using Option 50, the IEEE bus. This means that the instrument can be entirely calibrated remotely or under program control. As mentioned in the 'Procedure Outline' for a manual calibration, the rear panel address switch should be set to 31, i.e. all 1's. When a bus calibration is required the address switch must be set to the address number assigned to the DVM in the system. More details of calibration with the bus are included in section 1.8.

1.1.3.6 'Error 4'

If during calibration 'Error 4' is displayed, this indicates that the Calibration Source deviates too far from the calibration span of the instrument. Under these circumstances, the calibration memory is not updated and the instrument goes into 'Hold' with the calibration button calibration key LED remains on.

In the case of 'Zero', 'Gain' or 'AcHf' the Calibration Source should be checked and the same 'CALIBRATE' key repressed. The 'Hold' mode may be released any time and the instrument will free run again. If 'Error 4' follows 'Ib' or 'Lin' or persistently appears following 'Zero', 'Gain' or 'AcHf' then an instrument failure may have occurred. Therefore either consult our Customer Service Section or the Servicing Section of this Handbook.

1.2 DC VOLTAGE CALIBRATION

1.2.1 General

The procedure in the table opposite is all that is necessary to completely 'AUTOCAL' the DC voltage function. Steps 1 and 2 affect the accuracy on all ranges and should therefore be carried out even if just one range is being calibrated.

On each range a 'Zero' and 'Gain' calibration is required for each polarity of input. The two 'Zero' calibrations are included to overcome a possible zero difference with the polarity setting of the DC calibration source.

If the 'DVM Reading After Calibration' is not in accordance with the table, repeat operations of the same 'CALIBRATE' key are permissible. Where no tolerance is shown in this column, only the exact reading quoted with an occasional least significant digit showing is to be expected.

1.2.2 Equipment Required

- 1MΩ 'Lin' Source. This is a 1MΩ 5% resistor in parallel with a 1nF capacitor, shielded to reduce noise interference.

- 10MΩ 'Ib' Source. This is a 10MΩ 5% resistor in parallel with a 1nF capacitor, shielded to reduce noise interference.

Datron products, number 400391 and 400392, are available as 'Lin' and 'Ib' sources and are recommended.

- A DC Calibration Source. e.g.: Datron 4000/4000A Autocal Standard.

1.2.3 Checking Accuracy after 'AUTOCAL'

To check the accuracy after 'AUTOCAL' the 'Specification Verification' section of the User's Handbook will be useful; it provides tables for quick reference of accuracy on all ranges and functions in displayed digits.

DC VOLTAGE CALIBRATION

Step	Calibration Operation	Calibration Source Output	DVM Setting	'CALIBRATE' Key	DVM Reading After Calibration	Remarks
1	Linearity	1MΩ Lin Source	DC,1 Filter[1]	'Lin'	<10 digits (<100 digits)	This calibration step may take around 30 seconds to complete
2	Input Bias Current	10MΩ Ib Source	DC,.1	'Ib'	<100 digits	Each subsequent operation of 'Ib' should approximately halve the DVM reading
3	10V Range Zero	+0.0000V	DC,10	'Zero'	±0.0000V	
4	10V Positive Full Range	+10.0000V	DC,10	'Gain'	+10.0000V	
5	10V Range Zero	−0.0000V	DC,10	'Zero'	±0.0000V	
6	10V Negative Full Range	−10.0000V	DC,10	'Gain'	−10.0000V	
7	1V Range Zero	+0.00000V	DC,1	'Zero'	±.00000V	
8	1V Positive Full Range	+1.00000V	DC,1	'Gain'	+1.00000V	
9	1V Range Zero	−0.00000V	DC,1	'Zero'	±.00000V	
10	1V Negative Full Range	−1.00000V	DC,1	'Gain'	−1.00000V	
11	.1V Range Zero	+0.000mV	DC,.1	'Zero'	±0.000mV ±1 digit	Wait for the reading to stabilize before operating 'Zero'
12	.1V Positive Full Range	+100.000mV	DC,.1	'Gain'	+100.000V ±1 digit	
13	.1V Range Zero	−0.000mV	DC,.1	'Zero'	±0.000mV ±1 digit	Wait for the reading to stabilize before operating 'Zero'
14	.1V Negative Full Range	−100.000mV	DC,.1	'Gain'	−100.000V ±1 digit	
15	100V Range Zero	+0.000V	DC,100	'Zero'	±0.000V	
16	100V Positive Full Range	+100.000V	DC,100	'Gain'	+100.000V	
17	100V Range Zero	−0.000V	DC,100	'Zero'	±0.000V	
18	100V Negative Full Range	−100.000V	DC,100	'Gain'	−100.000V	
19	1000V Range Zero	+0.00V	DC,1000	'Zero'	±0.00V	
20	1000V Positive Full Range	+1000.00V	DC,1000	'Gain'	+1000.00V	⚡ Lethal voltages present - increase calibration source in 100V steps if possible
21	1000V Range Zero	−0.00V	DC,1000	'Zero'	±0.00V	
22	1000V Negative Full Range	−1000.00V	DC,1000	'Gain'	−1000.00V	⚡ Lethal voltages present - increase calibration source in 100V steps if possible

[1] For 1061A, Input Filter increases resolution by 1 digit – 1061A tolerance given in brackets ( ).

1.3 OHMS CALIBRATION

1.3.1 General

The procedure in the table opposite is all that is necessary to completely 'AUTOCAL' the Ohms function. If just the Ohms or just one range of the Ohms is to be calibrated, then steps 1 and 2 in the DC Voltage Calibration table should be carried out first. Then on each Ohms range just a 'Zero' and 'Gain' calibration is required.

If the 'DVM Reading After Calibration' is not in accordance with the table, repeat operations of the same 'CALIBRATE' key is permissible to improve the reading. Where no tolerance is shown in this column, only the exact reading quoted with an occasional least significant digit showing is to be expected.

1.3.2 'Zero' Resistance Source

For accurate 'Zero' calibration on Ohms it is ESSENTIAL that a correctly connected zero source is used. Two arrangements are necessary as shown in Fig. 1.1; it can be seen that '4 wire Ω' selection is recommended on all ranges.

1.3.3 Equipment Required

A set of resistance standards from 10Ω to 10MΩ in decades; it is essential that 10Ω to 100kΩ standards are 4 terminal devices. e.g. Datron 4000/4000A Autocal Standard with Option 20.

1.3.4 Checking Accuracy after 'AUTOCAL'

To check the accuracy after 'AUTOCAL' the 'Specification Verification' section of the Operating Handbook will be useful. It provides tables for quick reference of accuracy on all ranges and functions in displayed digits.

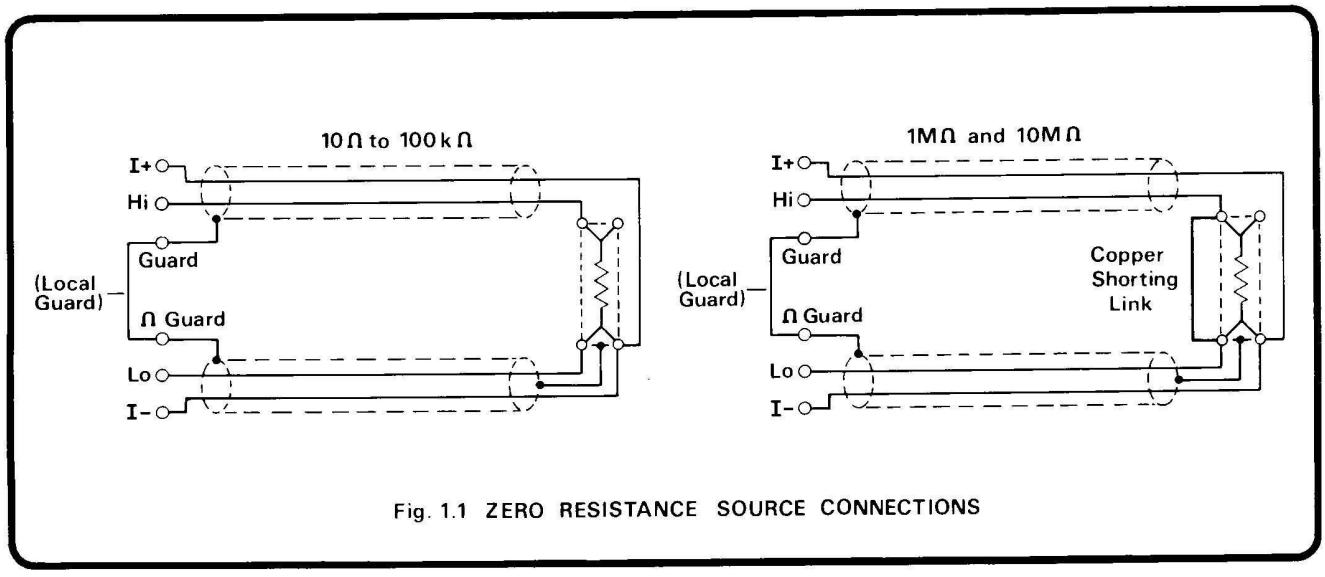

Fig. 1.1 ZERO RESISTANCE SOURCE CONNECTIONS

OHMS CALIBRATION TABLE

Step	Calibration Operation	Calibration Source	DVM Setting	'CALIBRATE' Key	DVM Reading After Calibration	Remarks
1	10Ω Range Zero	4 wire zero	kΩ, 4 wire, 10Ω	'Zero'	±0.0000Ω ±1 digit	Wait for the reading to stabilize before operating 'Zero'
2	10Ω Full Range	10Ω [1] Standard Resistor	kΩ, 4 wire, 10Ω	'Gain'	10.0000Ω ±1 digit	Wait for the reading to stabilize before operating 'Gain'
3	.1kΩ Range Zero	4 wire zero	kΩ, 4 wire, .1	'Zero'	±0.000Ω	
4	.1kΩ Full Range	100Ω [1] Standard Resistor	kΩ, 4 wire, .1	'Gain'	100.000Ω	
5	1kΩ Range Zero	4 wire zero	kΩ, 4 wire, 1	'Zero'	±.00000kΩ	
6	1kΩ Full Range	1kΩ [1] Standard Resistor	kΩ, 4 wire, 1	'Gain'	1.00000kΩ	
7	10kΩ Range Zero	4 wire zero	kΩ, 4 wire, 10	'Zero'	±0.0000kΩ	
8	10kΩ Full Range	10kΩ [1] Standard Resistor	kΩ, 4 wire, 10	'Gain'	10.0000kΩ	
9	100kΩ Range Zero	4 wire zero	kΩ, 4 wire, 100	'Zero'	±0.000kΩ	
10	100kΩ Full Range	100kΩ [1] Standard Resistor	kΩ, 4 wire, 100	'Gain'	100.000kΩ	
11	1000kΩ Range Zero	4 wire zero	kΩ, 4 wire, 1000 Input Filter[2]	'Zero'	±0.00kΩ (±0.000kΩ)	
12	1000kΩ Full Range	1000kΩ [1] Standard Resistor	kΩ, 4 wire, 1000 Input Filter[2]	'Gain'	1000.00kΩ ±1 digit (1000.000kΩ) (±10 digits)	
13	10MΩ Range Zero	4 wire zero	kΩ, 4 wire, 10MΩ Input Filter[2]	'Zero'	±0.0000MΩ (±0.00000MΩ)	
14	10MΩ Full Range	10MΩ [1] Standard Resistor	kΩ, 4 wire, 10MΩ Input Filter[2]	'Gain'	10.0000MΩ ±5 digits (10.00000MΩ) (±50 digits)	

[1] - With Standard Resistor sources it may be useful to use the 'KEYBOARD' method of calibration - see section 1.7

[2] - For 1061A, Input filter increases resolution by 1 digit, so 1061A figures are given in brackets ( ).

1.4 AC VOLTAGE CALIBRATION – OPTION 10 ONLY

1.4.1 General

The procedure in the table opposite is all that is necessary to completely 'AUTOCAL' the AC voltage function. On each range just a 'Zero', 'Gain' and 'AcHf' calibration is required.

If the 'DVM Reading After Calibration' is not in accordance with the table, repeat operation of the same 'CALIBRATE' key is permissible to improve the readings. This will be necessary with the AcHf key.

1.4.2 Equipment Required

A copper shorting link and an AC calibration source e.g. Datron 4200 Autocal AC Standard.

1.4.3 Checking Accuracy after 'AUTOCAL'

To check the accuracy after 'AUTOCAL' the 'Specification Verification' section of the Operating Handbook will be useful. It provides tables for quick reference of accuracy on all ranges and functions in displayed digits.

AC VOLTAGE CALIBRATION TABLE (OPTION 10 ONLY)

Step	Calibration Operation	Calibration Source Output	DVM Setting	'CALIBRATE' Key	DVM Reading After Calibration	Remarks
1	DC coupled AC Zero	Copper Shorting link	AC,DC,.1	'Zero'	0.000mV ±3 digits	Set 'Local Guard'. Do not set 'Input filter'. Wait for reading to stabilize before operating 'Zero'
2	.1V Range Zero	Copper Shorting link	AC,.1	Check only	<100 digits	
3	1V Range Zero	Copper Shorting link	AC,1	'Zero'	.00000V ±1 digit	
4	10V Range Zero	Copper Shorting link	AC,10	'Zero'	0.0000V ±1 digit	
5	100V Range Zero	Copper Shorting link	AC,100	'Zero'	0.000V ±1 digit	
6	1000V Range Zero	Copper Shorting link	AC,1000	'Zero'	0.00V ±1 digit	
7	10V Full Range LF	10V rms 500 Hz	AC,10 Input Filter	'Gain'	10.0000V ±1 digit	Select 'Input filter' for remaining steps
8	10V Full Range HF	10V rms 30 kHz	AC, 10 Input filter	'AcHf'	10.0000V ±5 digits	
9	1V Full Range LF	1V rms 500Hz	AC,1 Input filter	'Gain'	1.00000V ±1 digit	
10	1V Full Range HF	1V rms 30 kHz	AC,1 Input filter	'AcHf'	1.00000V ±5 digits	
11	.1V Full Range LF	.1V rms 500 Hz	AC,.1 Input filter	'Gain'	100.000mV ±2 digits	
12	.1V Full Range HF	.1V rms 30 kHz	AC,.1 Input filter	'AcHf'	100.000mV ±5 digits	
13	100V Full Range LF	100V rms 500 Hz	AC,100 Input filter	'Gain'	100.000V ±1 digit	
14	100V Full Range HF	100V rms 30 kHz	AC,100 Input filter	'AcHf'	100.000V ±5 digits	
15	1000V Full Range LF	1000V rms 500 Hz	AC,1000 Input filter	'Gain'	1000.00V ±1 digit	⚡ Lethal voltage present. - increase calibration source in 100V steps if possible
16	1000V Full Range HF	1000V rms 20kHz	AC,1000 Input filter	'AcHf'	1000.00V ±5 digits	⚡ Lethal voltage present - increase calibration source in 100V steps if possible. DO NOT EXCEED 25 kHz

1.4 AC VOLTAGE CALIBRATION – 1061A OPTION 12 ONLY

1.4.4 General

The procedure in the table opposite is all that is necessary to completely 'AUTOCAL' the AC voltage function. On each range just a 'Zero', 'Gain' and 'AcHf' calibration is required.

If the 'DVM Reading After Calibration' is not in accordance with the table, repeat operation of the same 'CALIBRATE' key is permissible to improve the readings. This will be necessary with the AcHf key.

Note: To reduce the effect of noise at low input levels, AC zero calibration is carried out at 0.1% Range; and for 100mV Range zero (steps 1 & 2 of the table), Guard is connected to Lo using a copper shorting link.

1.4.5 Equipment Required

A copper shorting link and an AC calibration source e.g. Datron 4200 Autocal AC Standard.

1.4.6 Checking Accuracy after 'AUTOCAL'

To check the accuracy after 'AUTOCAL' the 'Specification Verification' section of the User's Handbook can be employed. It describes the use of 'Spec' mode to verify the accuracy of the instrument, also providing a report sheet 'master copy' for compilation of permanent records.

AC VOLTAGE CALIBRATION TABLE (1061A OPTION 12 ONLY)

Step	Calibration Operation	Calibration Source Output	DVM Setting	'CALIBRATE' Key	DVM Reading After Calibration	Remarks
1	DC coupled AC Zero	0.100mV 500Hz (short Guard to Lo)	AC,DC,.1	'Zero'	0.100mV ±10 digits	Set 'Local Guard'. Do not set filter in. Wait for reading to stabilize before operating 'Zero'
2	.1V Range Zero	Short Hi to Lo to Guard	AC,.1	Check only	<100 digits	
3	1V Range Zero	0.00100V 500Hz	AC,1	'Zero'	0.00100V ±1 digit	
4	10V Range Zero	0.0100V 500Hz	AC,10	'Zero'	0.010,0V ±1 digit	
5	100V Range Zero	0.100V 500Hz	AC,100	'Zero'	0.100V ±1 digit	
6	1000V Range Zero	1.00V 500Hz	AC,1000	'Zero'	1.00V ±1 digit	
7	10V Full Range LF	10V rms 500Hz	AC,10	'Gain'	10.000,0V ±1 digit	
8	10V Full Range HF	10V rms 30KHz	AC,10	'AcHf'	10.000,0V ±10 digits	
9	1V Full Range LF	1V rms 500Hz	AC,1	'Gain'	1.000,00V ±1 digit	
10	1V Full Range HF	1V rms 30kHz	AC,1	'AcHf'	1.000,00V ±10 digits	
11	.1V Full Range LF	.1V rms 500Hz	AC,.1	'Gain'	100.000mV ±2 digits	
12	.1V Full Range HF	.1V rms 30kHz	AC,.1	'AcHf'	100.000mV ±10 digits	
13	100V Full Range LF	100V rms 500Hz	AC,100	'Gain'	100.000V ±1 digit	
14	100V Full Range HF	100V rms 30kHz	AC,100	'AcHf'	100.000V ±10 digits	
15	1000V LF Range Gain	500V rms 500Hz	AC,1000	'KEYBOARD 500V' 'Gain'	500.00V ±1 digit	Lethal voltage present - increase calibration source in 100v steps if possible
16	1000V HF Range Gain	500V rms 20kHz	AC,1000	'KEYBOARD 500V' 'AcHf'	500.00V ±15 digits	Lethal voltage present - increase calibration source in 100V steps if possible. DO NOT EXCEED 25kHz

1.5 DC CURRENT CALIBRATION

(No DC Current facility if Option 12 is fitted)

1.5.1 General

The procedure in the table below shows all that is necessary to completely 'AUTOCAL' the DC Current function. If just the DC Current or just one range of DC Current is to be calibrated, then step 11 to 14 of the DC Voltage Calibration table should be carried out first. Then on each DC Current range just a 'Zero' and 'Gain' calibration is required.

If the 'DVM Reading After Calibration' is not in accordance with the table then repeat operation of the same 'CALIBRATE' key is permissible to improve the reading. Where no tolerance is shown in this column, only the exact reading quoted with an occasional least significant digit showing is to be expected.

1.5.2 Equipment Required

A DC Current calibration source. e.g. Datron 4000/4000A Autocal Standard with Option 20.

1.5.3 Checking Accuracy after 'AUTOCAL'

To check the accuracy after 'AUTOCAL' the 'Specification Verification' section of the Operating Handbook will be useful. It provides tables for quick reference of accuracy on all ranges and functions in displayed digits.

DC CURRENT CALIBRATION TABLE

Step	Calibration Operation	Calibration Source Output	DVM Setting	'CALIBRATE' Key	DVM Reading After Calibration	Remarks
1	.1mA Range Zero	0.000μA	DC,I,.1	'Zero'	±0.000μA ±1 digit	Do not select 'Input filter'
2	.1mA Full Range	+100.000μA	DC,I,.1	'Gain'	+100.000μA ±2 digits	
3	1mA Range Zero	0.00000mA	DC,I,1	'Zero'	±.00000mA ±1 digit	
4	1mA Full Range	+1.00000mA	DC,I,1	'Gain'	+1.00000mA ±2 digits	
5	10mA Range Zero	0.0000mA	DC,I,10	'Zero'	±0.0000mA ±1 digit	
6	10mA Full Range	+10.0000mA	DC,I,10	'Gain'	+10.0000mA	
7	100mA Range Zero	0.000mA	DC,I,100	'Zero'	±0.000mA	
8	100mA Full Range	+100.000mA	DC,I,100	'Gain'	+100.000mA	
9	1000mA Range Zero	0.00mA	DC,I,1000	'Zero'	±0.00mA	
10	1000mA Full Range	+1000.00mA	DC,I,1000	'Gain'	+1000.00mA	

1.6 AC CURRENT CALIBRATION

(In conjunction with Option 10 only)

1.6.1 General

The procedure in the table below shows all that is required to completely 'AUTOCAL' the AC Current function. If just the AC Current or just one range of AC Current is to be calibrated, then steps 1, 2, 11 & 12 of the Option 10 AC Voltage Calibration table must be carried out first. Then on each range just a 'Zero' and 'Gain' calibration is required.

If the 'DVM Reading After Calibration' is not in accordance with the table then repeat operations of the same 'CALIBRATE' key is permissible to improve the reading.

1.6.2 Equipment Required

An AC Current calibration source at 1kHz. e.g. Datron 4200 Autocal AC Standard with option 30.

1.6.3 Checking Accuracy after 'AUTOCAL'

To check the accuracy after 'AUTOCAL' the specification Verification section of the Operation Handbook will be useful. It provides tables for quick reference of accuracy on all ranges and functions in displayed digits.

AC CURRENT CALIBRATION TABLE

Step	Calibration Operation	Calibration Source Output	DVM Setting	'CALIBRATE' Key	DVM Reading After Calibration	Remarks
1	DC coupled AC Zero	No connections to DVM input terminals	I,DC,AC,.1	'Zero'	0.000μA ±5 digits	Do not select 'Input filter'
2	.1mA Range Zero	"	I,AC,.1	Check only	<±100 digits	Cancel DC coupled
3	1mA Range Zero	"	I,DC,AC,1	'Zero'	.00000mA ±5 digits	
4	10mA Range Zero	"	I,DC,AC,10	'Zero'	0.0000mA ±5 digits	
5	100mA Range Zero	"	I,DC,AC,100	'Zero'	0.000mA ±5 digits	
6	1000mA Range Zero	"	I,DC,AC,1000	'Zero'	0.00mA ±5 digits	
7	.1mA Full Range	100μA, 1kHz	I,DC,AC,.1	'Gain'	100.000μA ±10 digits	
8	1mA Full Range	1mA, 1 kHz	I,DC,AC,1	'Gain'	1.00000mA ±10 digits	
9	10mA Full Range	10mA, 1 kHz	I,DC,AC,10	'Gain'	10,0000mA ±10 digits	
10	100mA Full Range	100mA, 1 kHz	I,DC,AC,100	'Gain'	100,000mA ±10 digits	
11	1000mA Full Range	1A, 1 kHz	I,DC,AC,1000	'Gain'	1000.00mA ±10 digits	

1.7 CALIBRATION USING 'KEYBOARD'

1.7.1 General

The 'KEYBOARD' method of calibration is useful when a calibration source although set to a nominal value has known errors. In this situation the known value of the calibration source can be entered into the DVM before the 'AUTOCAL' process is executed. The process is functional during any calibration with a source of magnitude between 20% and 200% of the range selected, but it should be noted that for equal magnitude source errors, calibrating at the lower percentage end of range produces a higher percentage calibration error. The 'KEYBOARD' method operates for both the 'Gain' and 'AcHf' calibration operations. An example using 'KEYBOARD' to calibrate directly against a Standard Cell is shown in the table below.

1.7.2 'KEYBOARD' with Negative Inputs

If the 'KEYBOARD' method is used on DC Voltage calibration with Negative polarity sources, it is important NOT to enter a negative sign with the keyed-in source value. The instrument itself can determine the polarity of the source and update the appropriate calibration memory location.

1.7.3 'KEYBOARD' Calibration Example

The example shown in the table below uses 'KEYBOARD' to calibrate the 1000V AC LF Range Gain at 500V (step 15 of the AC Voltage Calibration table for Option 12).

CALIBRATION EXAMPLE USING 'KEYBOARD'

Step	Calibration Operation	Calibration Source	DMM Setting	'CALIBRATE' Key	DMM Reading After Calibration	Remarks
1	1000V Range Zero	1.00V rms 500Hz	AC,1000	'Zero'	1.00V ±1 digit	
2	Set and Enter Source Value	500.00V rms 500Hz	'KEYBOARD' then 5,0,0,-,0,0	–	0 then +500.00	Lethal voltage present. Increase Calibration Source in 100V steps if possible
3	1000V AC LF Range Gain Calibration	As above	–	'Gain'	500.00V ±1 digit	

1.8 'AUTOCAL' OVER THE BUS

All the calibration procedures covered in this manual can be carried out remotely using Option 50, the IEEE Bus.

Effectively, the five calibration keys are replaced by five Bus instructions and these are used instead of the 'CALIBRATE' keys listed in the Calibration tables on previous pages.

An example of calibration with the Bus is given in the table below. A complete program listing for the same calibration operation assuming an HP9825 controller is as follows:—

```
Ø: dim D$[15]          define 15 character string
                       variable
1:  clr 728            send 'device clear' to DVM
                       (interface 7, address 28)
2: wrt 728,"F3R3Q1W1="  program to DC 1V, SRQ
                       Mode 1, Enable Cal.
3: Ø→S
4: wrt 728,"GØ="       program zero cal. trigger
5: oni 7,"srq"         jump to SRQ service routine
                       on interrupt
6: eir 7,128           enable SRQ interrupts from
                       interface 7
7: if bit ("Ø1XXXXXX",S)  check status byte S
   =Ø;jmp -1           obtained by service routine
8: dsp "Apply 1V &     prompt operator to apply
   CONTINUE"           calibration source on com-
                       pleting zero cal
9: Ø→S;stp
10: wrt 728,"G1="      program gain cal. trigger
11: oni 7,"srq"
12: eir 7,128
13: if bit ("Ø1XXXXXX",S)
   =Ø;jmp -1
14: wrt 728,"TØWØ="    program to Internal Trigger,
                       Disable Cal. on completion
                       of gain cal.
15: lcl 728            program DVM to local state
16: stp
17: "srq":rds(728)→S   SRQ service routine to read
                       status byte
18: red 728,D$
19: iret
*7717
```

CALIBRATION EXAMPLE USING THE BUS

Step	Calibration Operation	Calibration Source	DVM Setting	Bus Controller Instruction	DVM Reading After Calibration	Remarks
1	Set DVM to known state	—	In Remote State	'Device Clear'	—	Program DVM to predetermined state AØCØDXEØF3MØNØ OØPØQØR6SØT5
2	Set DVM to DCV, 1V Range, and prepare for calibration	+0.00000V	Calibration key to 'CAL'	'F3R3Q1W1='	—	Program DVM to Function: DC V(F3) Range: 1V (R3) SRQ Mode 1 (Q1) Enable Cal. (W1)
3	1V Range Zero	+0.00000V	In Remote State	'GØ='	±.00000V	Program 'Zero' cal., SRQ indicates when calibration operation completed
4	1V Positive Full Range	+1.00000V	In Remote State	'G1='	+1.00000V	Program 'Gain' cal., SRQ indicates when calibration operation completed
5	Set DVM to Internal Trigger, Disable Cal.	—	In Remote State	'TØWØ='	—	Program DVM to Internal Trigger (TØ), Disable Cal. (WØ)
6	—	—	In Local State, Calibration key to 'RUN'	'Local'	—	DVM in normal mode, free-running

SECTION 2

MECHANICAL DESCRIPTION

2.1 GENERAL

The 1061 has been designed to be either rack mounted in a standard 19" rack (3½" (2U) height required) or bench top/portable with integral tilt stand. An exploded view of the instrument is shown in Fig 2.1.

2.2 FRONT PANEL

The front panel incorporates the signal input terminals, range, function, mode, keyboard, compute and power switches and a numeric/legend gas discharge display.

2.3 REAR PANEL

The rear panel incorporates the mains supply, power input socket and fuses, digital and analog output sockets, rear and ratio signal input sockets, rear/front panel signal input selection switch, run/calibrate keyswitch, calibration interval (error) select switch and current option fuse.

2.4 EXTERNAL CONSTRUCTION

A screen printed key designation overlay adheres to the front panel retaining the polarising filter in front of the display. Both the front and rear panels are held together by two side extrusions running from front to rear. These side extrusions provide both slots for the handles or rack mounting 'ears' and locating points for the structural foam covers. The bottom cover is fitted with the tilt-stand, rubber feet and instruction card. Earth screening of the covers and guarding is provided by aluminium plates, heat-staked to the inside of the covers with electrical connections made by spring contacts.

2.5 INTERNAL CONSTRUCTION

An internal chassis is constructed from five printed circuit boards, held together by connectors at each corner and held rigid by two inner aluminium shields fixed horizontally on the instrument's centre line running from front to rear. Input terminals, switches and display are mounted on the front printed circuit board (pcb) and the power supply on the rear pcb. The two side and centre pcb's are used for interconnections between the main circuit boards.

All the main circuit boards are mounted on the inner shields with hinges and quick release fasteners with flexible connections to allow operation in the 'hinged-up' position. The Analog output circuitry is fixed on to the rear pcb of the chassis and the Ratio/Rear Input circuitry on to the rear panel. The options are mechanically fitted and require no soldering.

The chassis is mounted on to the side extrusions with nylon screws, spacers and an insulation sheet to ensure that the 'electrical spacings' of the BSI, UL and VDE specifications are achieved.

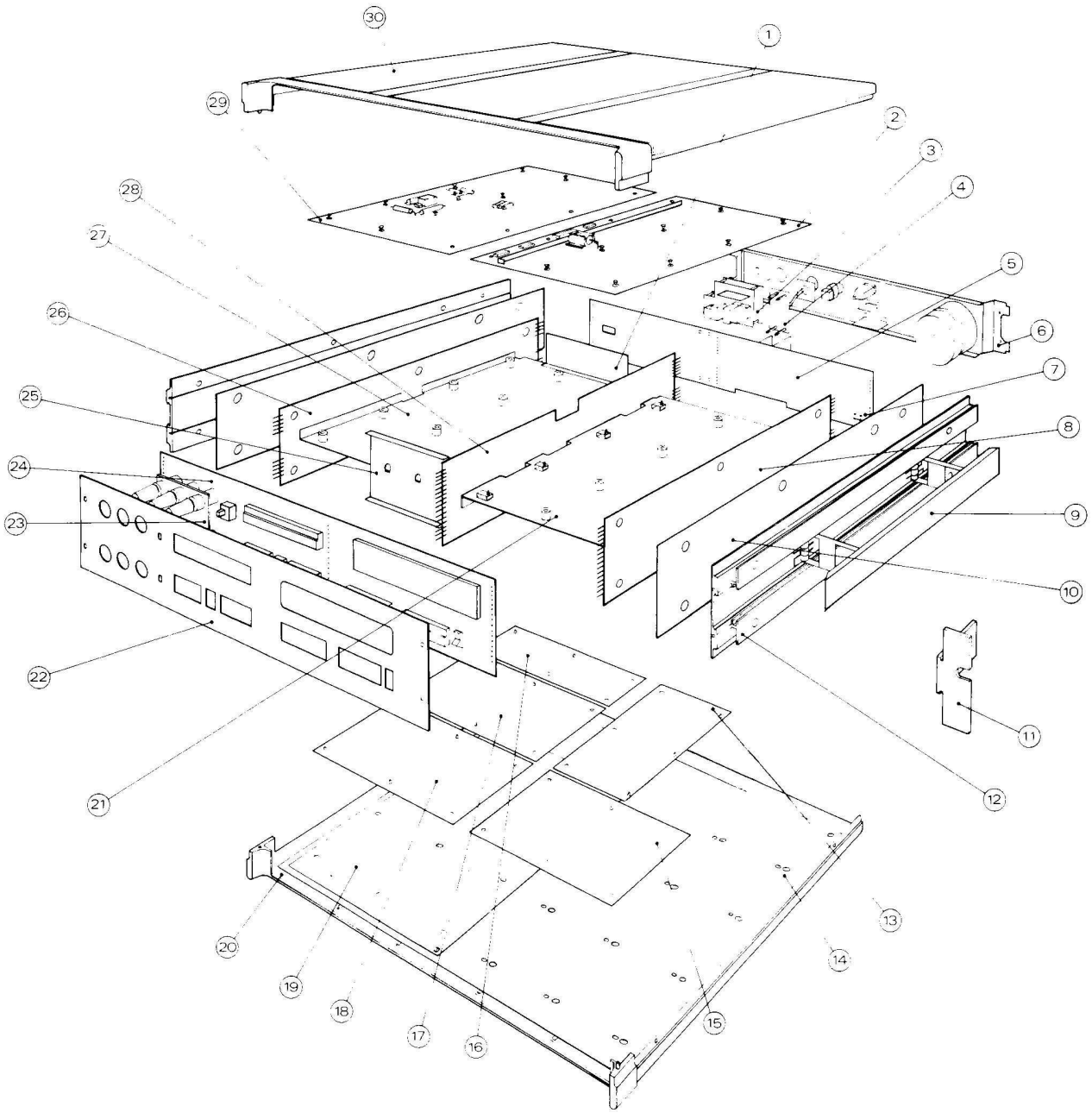

1. REAR GUARD SCREEN
2. DIGITAL ASSEMBLY
3. RATIO/REAR INPUT ASSEMBLY (OPTION)
4. ANALOG OUTPUT ASSEMBLY (OPTION)
5. REAR (POWER SUPPLY) PCB ASSEMBLY
6. REAR PANEL ASSEMBLY
7. POWER SUPPLY VOLTAGE SELECTION LINKS
8. R.H. PCB ASSEMBLY
9. HANDLE ASSEMBLY
10. INSULATION SHEET
11. RACK MOUNTING BRACKET
12. SIDE EXTRUSION
13. DIGITAL INTERFACE ASSEMBLY (OPTION)
14. EARTH SCREEN
15. DISPLAY DRIVER ASSEMBLY
16. CURRENT ASSEMBLY (OPTION) } See Note [1]
17. AC ASSEMBLY (OPTION 10) }
18. OHMS ASSEMBLY (OPTION)
19. OUTER GUARD SCREEN
20. BOTTOM COVER ASSEMBLY
21. R.H. CENTRE GUARD SCREEN
22. FRONT PANEL AND OVERLAY
23. TERMINAL SUPPORT PLATE
24. FRONT PCB ASSEMBLY
25. FRONT GUARD SCREEN
26. L.H. PCB ASSEMBLY
27. L.H. CENTRE GUARD SCREEN
28. CENTRE PCB ASSEMBLY
29. ANALOG ASSEMBLY
30. TOP COVER ASSEMBLY

FIG. 2.1 EXPLODED VIEW OF INSTRUMENT

[1] AC Assembly for 1061A Option 12 is fitted in place of AC Option 10 and Current Option 30 pcb assemblies

SECTION 3

TECHNICAL DESCRIPTION

3.1 INTRODUCTION

The internal circuits of the basic DC only instrument are divided between five printed circuit board assemblies (shown in bold outline in Fig. 3.1).

For the purpose of explanation, each assembly will be described separately and each assembly further sub-divided according to the various functions involved.

3.2 ANALOG ASSEMBLY (Circuit Drawing No. 430328)

The Analog assembly is split into three distinct sections: (i) the Analog Interface, (ii) the DC Isolator and (iii) the Analog to Digital (A - D) Converter.

The Analog Interface receives data from the Digital assembly to control the selection, range scaling and other features of the analog circuitry. Messages between the Analog and Digital assemblies are passed via opto-isolators, electrically isolating one from the other.

The DC Isolator includes the preamplifier, range scaling circuits and bootstrapped supplies. The A - D section converts the scaled input signal to a time period proportional to the signal using a modified triple slope technique.

3.2.1 Analog Interface (430328 sheet 5)

3.2.1.1 Introduction

The Analog Interface provides electrical isolation between the Digital and Analog circuitry. Latched data from the microprocessor is passed through opto-isolators, decoded and latched again on an analog assembly to select function, range, test, average and the D - A converter set up conditions. A line is also provided to instruct the micro-processor which options are present and if the AC assembly is measuring a signal above 5kHz.

3.2.1.2 Power-On

At power-on the A - D converter is placed into the RESET condition (See Section 3.2.3.8). The analog circuitry is then interrogated to discern which options (if any) are fitted. Finally the analog circuitry is placed into the DC, 1000V range until a different range or function is selected (See Fig. 3.3).

To determine which options are fitted the Digital assembly sends a series of messages across the isolation barrier, decodes them on the analog side and gates them with lines from the option assemblies to feed a signal back across the isolation barrier to the micro-processor.

Looking at the procedure, in more detail, the Analog Interface Data (ID) lines are all set to a logic '1' except one, which is set to a logic '0', depending on the option being interrogated (See Fig. 3.2). As an example we will check to see if the AC option is fitted. ID1 is set low, the rest of the ID lines set high and the Analog Interface Address lines, IAØ and IA1 set low. The opto-isolators *invert* all signals, thus M17-3 is low and M19 pins 10, 4 and 11 are high. If the AC option is *not* fitted M19-2 is driven low via R55 from M17-3, causing M19-3 to be high, producing a logic '0' (−15 volts) on M18-4. If the AC option *is* fitted a 33kΩ resistor on the AC assembly (R14) overrides R55 and and a high is placed on M19-2. The effect is to produce a

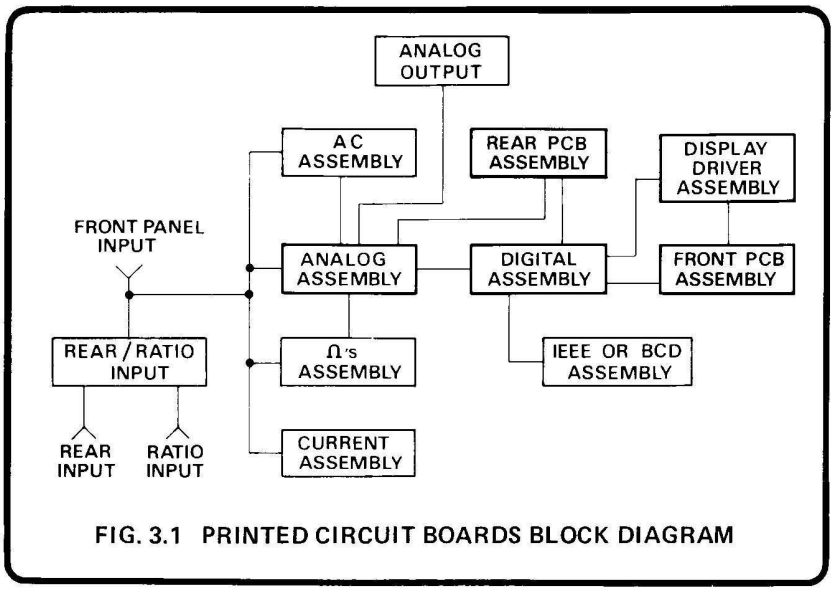

FIG. 3.1 PRINTED CIRCUIT BOARDS BLOCK DIAGRAM

Option checked	ID line low	Pin No. of M19 held low if Option incorporated
AC	ID 1	M19-3
Ω	ID 2	M19-11
I	ID 3	M19-4
RATIO	ID 4	M19-10

Fig. 3.2 POWER-ON OPTIONS FITTED TEST

high on M18-4, turning the opto-isolator M2-B on and thus COND. VAL (M2-8) is high, signalling to the Digital assembly that the AC option is fitted. Similarly, when the Ω, I or RATIO options are interrogated, the appropriate output of M19 is set low if the option is fitted causing the COND. VAL to be set high.

*Note: ID and IA lines
logic '1' ≡ +5 volts logic '0' ≡ 0 volts
AD lines
logic '1' ≡ 0 volts logic '0' ≡ --15 volts

The next step in the power-up sequence as far as the analog circuits are concerned, is to be placed into the DC, 1000V range (See Fig. 3.3 Flowchart). Firstly, all assemblies are deselected by placing logic '1's on all the ID lines, then setting the IAØ and IA1 lines low (see Fig. 3.4), clocking the option selects latches (M20 Analog assembly, M5 AC assembly, M9 Ohms assembly, M1 Ratio assembly from M17-3. Both IA lines then return high.

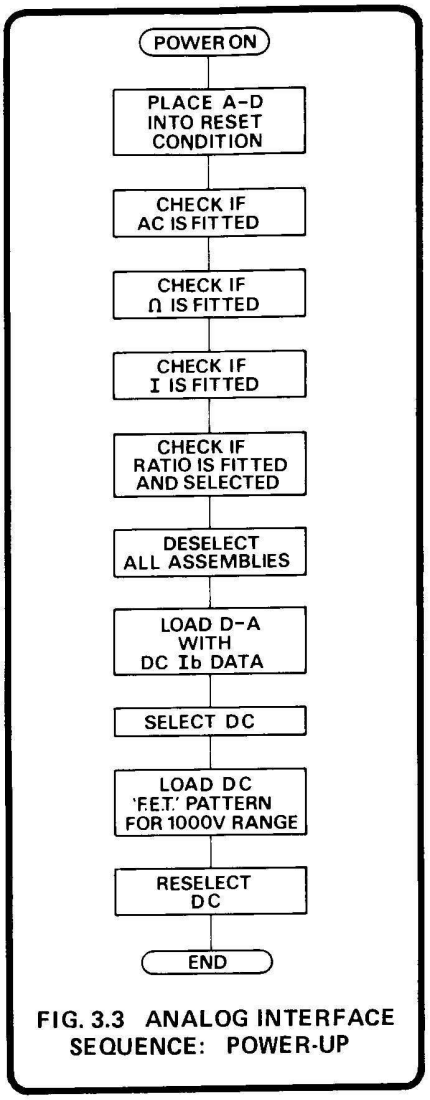

FIG. 3.3 ANALOG INTERFACE SEQUENCE: POWER-UP

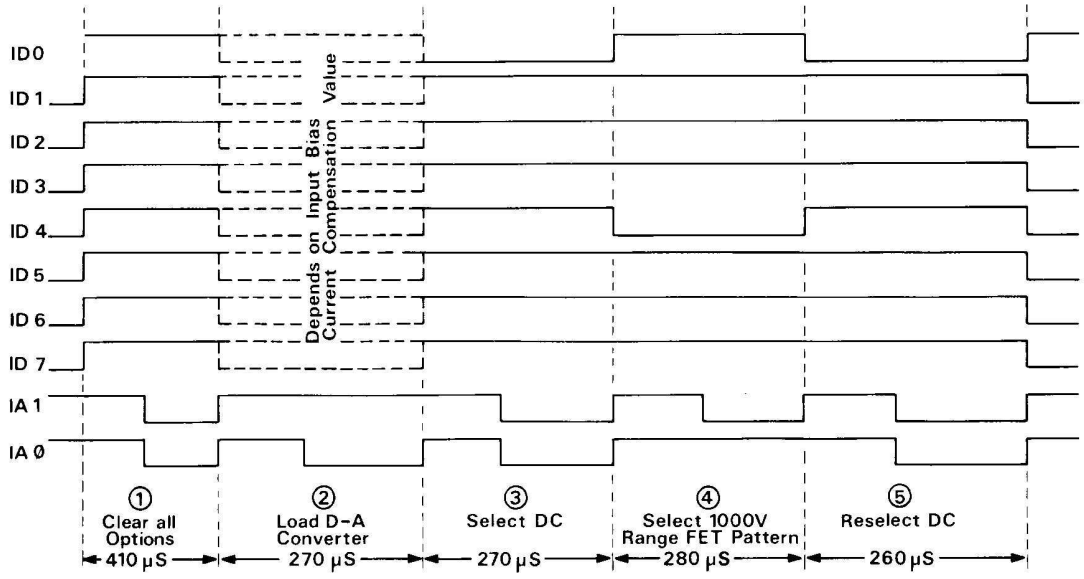

FIG. 3.4 ANALOG INTERFACE DATA LINE TIMING DIAGRAM (POWER-UP)

Secondly, the latches of the D - A converter (M13, M14) are set up with the input bias current (Ib) compensation data. The ID lines are set to the appropriate pattern and the information is clocked on to M13 and M14 by a delayed low to high edge from M17-4, originating from IAØ going low. The delay makes sure that the signal from M17-10 has disabled the "F.E.T." latch M21. Once again, the IAØ line returns to the resting state of logic '1'. Thirdly, the DC analog circuits are enabled by setting all the ID lines high except for ID0, then clocking M20 by a low to high edge from M16-6 caused by both IA lines going low. Once DC has been selected, the F.E.T. pattern latch is enabled from M12-1, and the penultimate step is to load this latch with 1000V range data from the ID lines (ID4 low, the rest high). This is executed by clocking the 'F.E.T.' latch from M17-4 once again, but this time being due to IA1 going low. The final step is to reselect DC as described above.

3.2.1.3 General Interface Update Sequence

Before the start of each reading, the analog interface undergoes a complete update. The series of events is the same as the power-up sequence for selection of function and range, as can be seen by comparing the two flowcharts (Figs. 3.3 and 3.5). When Ohms or Current is selected, the DC Isolator or AC assembly is also used in the measurement procedure as seen in the following table.

Type of Measurement	Circuits Selected	Use of D - A
DC Volts	Analog Assembly	Input Bias Current Compensation
AC Volts	AC Assembly	Frequency Compensation
AC + DC Volts	AC Assembly	Frequency Compensation
Resistance	Ohms Assembly and Analog Assembly	Input Bias Current Compensation
DC Current	Current Assembly and Analog Assembly	Input Bias Current Compensation
AC Current	Current Assembly and AC Assembly	Frequency Compensation
AC + DC Current	Current Assembly and AC Assembly	Frequency Compensation

The update sequence order is (i) Deselect all assemblies, (ii) Load D - A latches, (iii) Select AC assembly or DC Isolator, (iv) Load range pattern into DC or AC range latches, (v) Deselect DC or AC and select either the Ohms or Current assembly, (vi) Load range pattern into Ω's or I range latches, (vii) Reselect circuits selected in (iii) and (iv).

Note: Steps (v) and (vi) are used only when I or Ω is selected.

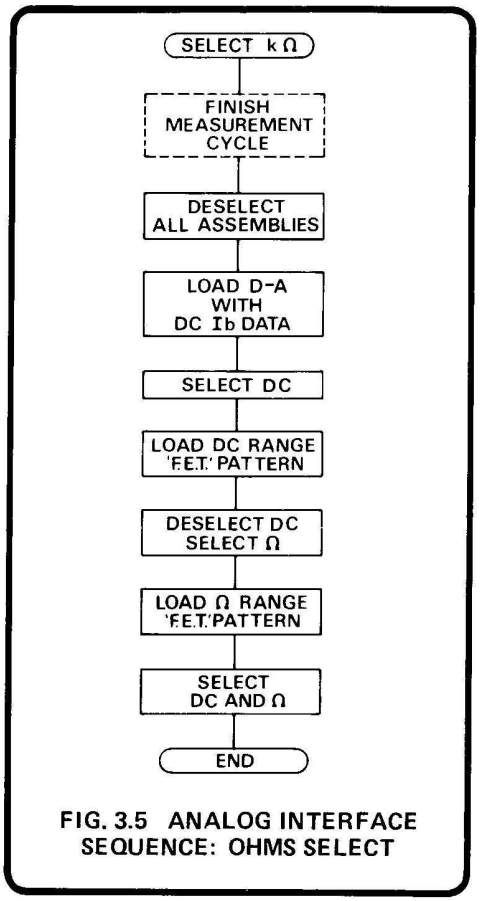

FIG. 3.5 ANALOG INTERFACE SEQUENCE: OHMS SELECT

Flowchart 3.5 gives the above sequence for an ohms update. The general form of the timing diagram for the above sequence is given in Fig. 3.6, the analog 'F.E.T.' patterns for each range of each function being given in Appendix 1.

3.2.1.4 Test

When TEST is selected, a logic '0' is placed on ID7 at stages (iii), (v) and (vii) in Fig. 3.6, i.e. each time a function measurement circuit is selected. Appendix 1 lists the 'F.E.T.' patterns of each assembly for each test measurement cycle.

3.2.2 DC Isolator Section

3.2.2.1 Preamplifier Scaling (430328 sheet 1)

Figure 3.8 shows the essential features of the isolator scaling circuit. For the purpose of explanation the same symbols are used, regardless of whether the switching is accomplished electronically (F.E.T.) or by means of relay contacts. In Fig. 3.8 all switches are shown in the 1V RANGE position.

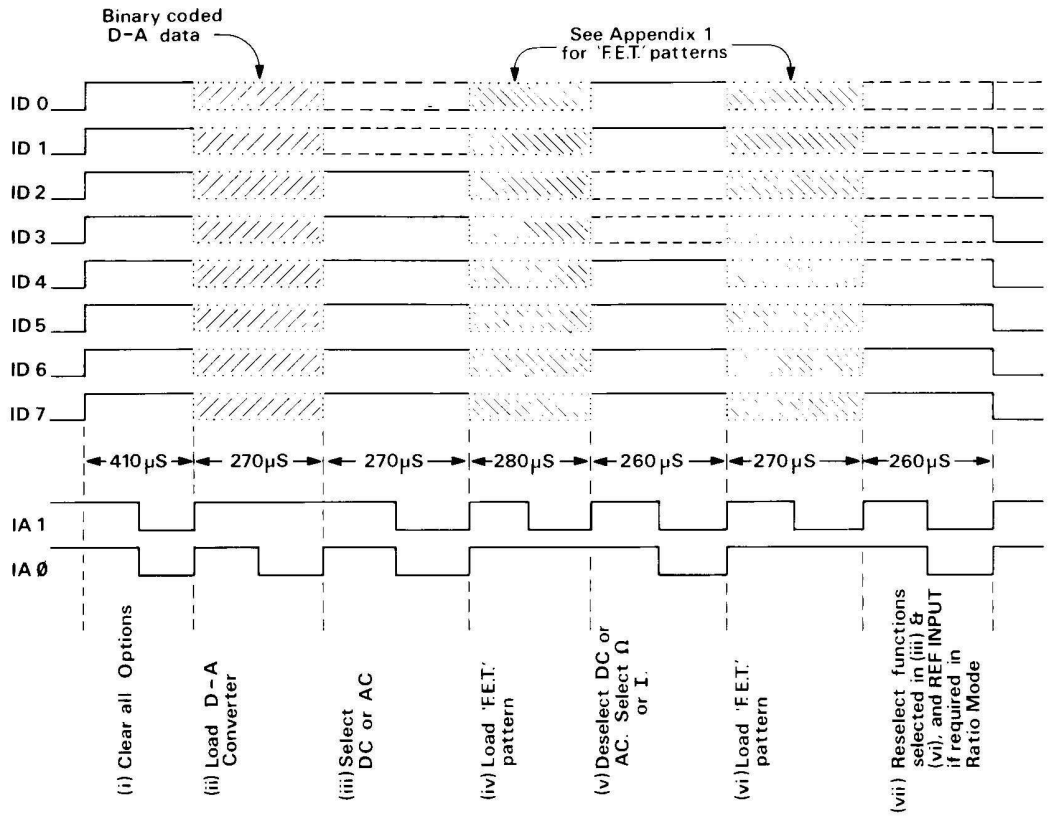

FIG. 3.6 GENERAL FORM OF ANALOG INTERFACE UPDATE TIMING DIAGRAM

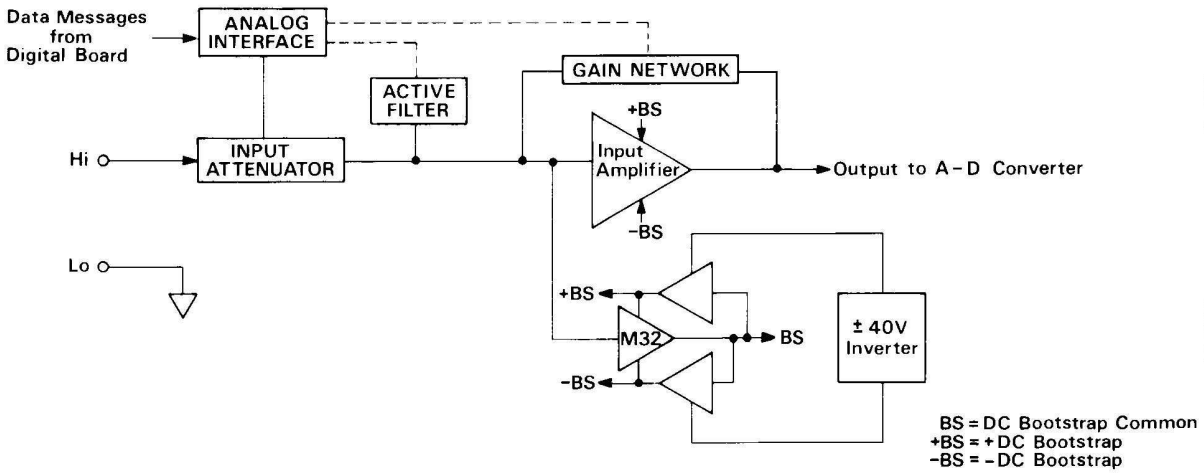

FIG. 3.7 SIMPLIFIED DIAGRAM OF DC ISOLATOR

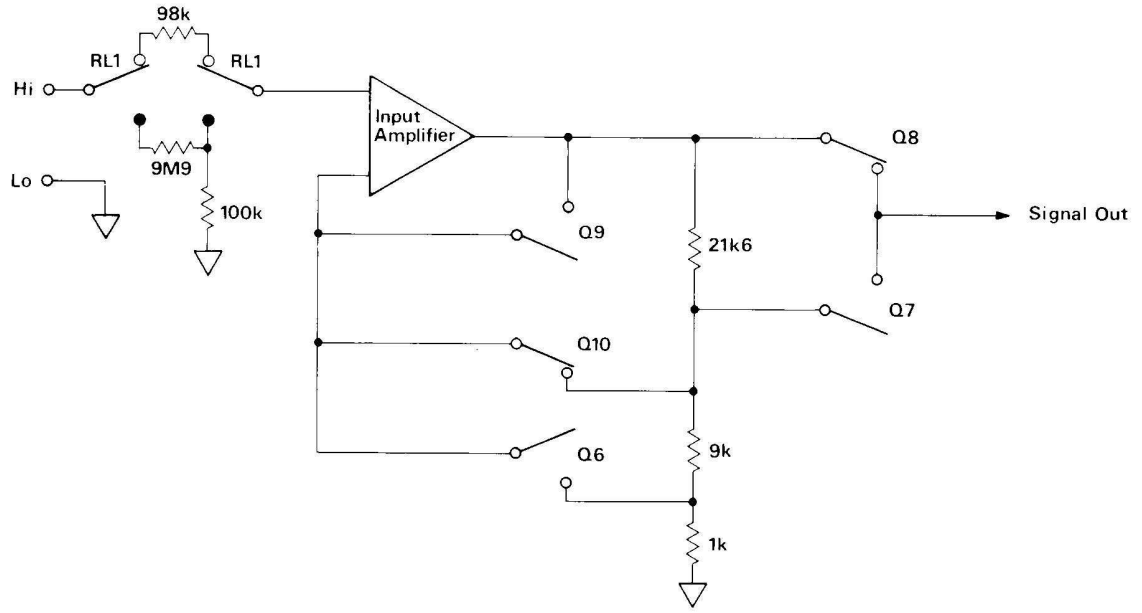

FIG. 3.8 SIMPLIFIED DIAGRAM OF ISOLATOR SWITCHING

The various switching combinations for the different ranges are as follows:—

Range	Gain	Q6	Q7	Q8	Q9	Q10	RL1
100mV	x31.6	ON	OFF	ON	OFF	OFF	ON
1V	x3.16	OFF	OFF	ON	OFF	ON	ON
10V	÷3.16	OFF	ON	OFF	ON	OFF	ON
100V	÷31.6	OFF	OFF	ON	OFF	ON	OFF
1000V	÷316	OFF	ON	OFF	ON	OFF	OFF
$\overline{DC}$		OFF	OFF	OFF	ON	OFF	OFF

The configuration of the circuit for each range is shown in Fig. 3.9.

Reference should be made to circuit diagram number 430328, sheet 1, for the complete circuit. Sheet 2 gives tables of the coding on the input control lines (from the Analog Interface).

When the 100V or 1kV range is selected, a ÷100, 10MΩ input attenuator (R143, R156, R149, R148) is incorporated into the circuit. This is a matched set of resistors for low temperature coefficient. The selection of a lower range energizes relay RL1 (via Q33), causing resistor chain R119-R122 to be in series with the Hi input. Should an overload signal then be applied, the resistor chain limits the current and the power dissipation is such that 1000V can be applied continuously.

The amplifier end of the resistors is clamped by zener diodes D22, D23 and Q18, Q19 to low, thus the amplifier input can never exceed approximately ± 24 volts.

The output from the DC Isolator, test point (TL8) is approximately 3.16 volts ($\approx\sqrt{10}$) for a full range (100,000) input by the following methods (See Fig. 3.9):—

100mV Range — Q6 and Q8 are turned on; all other F.E.T.'s are turned off and RL1 energised. Thus the output of the amplifier is connected to its inverting input via R108, R109, R110, R111 and Q6, an attenuator chain of ÷31.6, giving the amplifier an overall gain of X 31.6 Q8 connects the preamplifier directly to the output.

1V Range — Q10 and Q8 are turned on, all other F.E.T.'s are turned off and RL1 energised. The output of the amplifier is connected to its inverting input via R108, R109, R110, R111 and Q10, an attenuator chain of ÷3.16, giving the amplifier an overall gain of X 3.16. Q8 connects the preamplifier directly to the output.

10 V Range — Q9 and Q7 are turned on; all other F.E.T.'s are turned off and RL1 energised. Q9 causes the amplifier output to be directly connected to its inverting input, giving a gain of unity. The output of the amplifier is attenuated by 3.16 (R114, R115) before being passed to the output via Q7 instead of Q8.

100V and 1000V Ranges — These two ranges select the 1V and 10V ranges respectively but a ÷100 attenuator (R149, R156, R143, R148) is inserted between Hi and the preamplifier input when RL1 is de-energised.

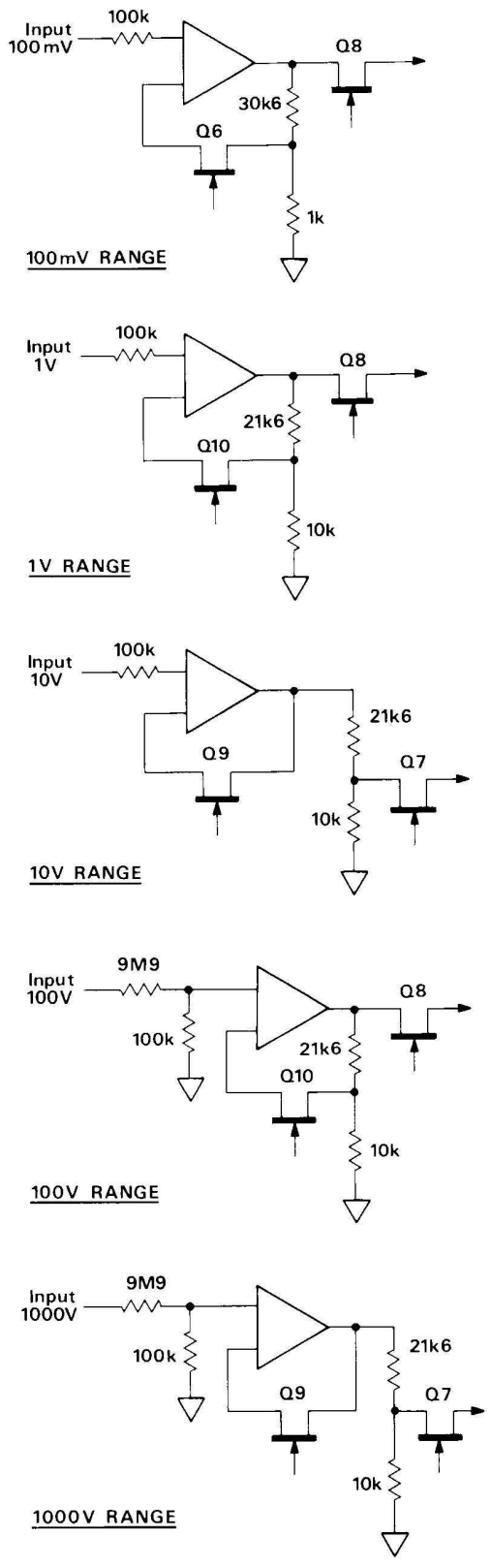

FIG. 3.9 PREAMPLIFIER GAIN CIRCUITS

3.2.2.2 Preamplifier (430328 sheet 1)

The preamplifier is designed to present an input impedance of greater than 10,000MΩ for signals up to ± 20 volts. It is also bootstrapped (tracking of both ground lines and supply voltages with input signal) being essential for correct operation of input bias compensation, temperature compensation and common mode rejection.

Q12 is a well matched monolithic NPN transistor pair exhibiting minimal voltage drift and low noise characteristics, the output being buffered by M31. To compensate for the current gain drift of Q12 (approx. −1%/°C), the change in the base-emitter voltage of one half of Q12 is sensed by M30. The drift compensation is linearised to 1%/°C by thermistor R218. Thus the input bias current is kept constant with temperature.

3.2.2.3 D.C. Bootstrap (430328 sheet 2)

Bootstrapped supplies are generated which track the input signal directly (BS), track the input signal with a positive offset of +12V(+BS) and track the input signal with a negative offset of −12(−BS).

M32 is the high inpedance buffer which tracks the inverting input of the preamplifier. The offset of M32 is adjusted so that its input is within 100μV of the input of the preamplifier. M32 thus functions as the low impedance rail (BS) following the input signal.

Selection of DC(M20-3) enables the capacitive inverter driven from M33 to provide an unregulated +42V(TL4) and −42V(TL5) supply from the ±15V supply.

The positive bootstrap supply (+BS) is generated as a current source comprising Q26 and the shunt regulator, Q27, referenced to D50. When the output voltage of the regulator is approximately 1.2 volts above D50 cathode, Q27 conducts current into R175. Since the current in R175 is controlled to be constant by Q30, referenced to D50, the current flowing through R174 is reduced. Hence the supply current, "mirrored" in R173, is reduced and the output voltage controlled.

The negative bootstrap supply (−BS) is generated in a similar manner. Thus bootstrapped supplies of approximately ±12 volts are produced, tracking the input signal exactly.

3.2.2.4 Filtering (430328 sheet 1)

Selection of filter causes an active filter to be switched in by relay, RL2, (via Q32). The filter gives an attenuation of −34 dB at 50Hz. The essential components of the filter are shown in Fig. 3.10.

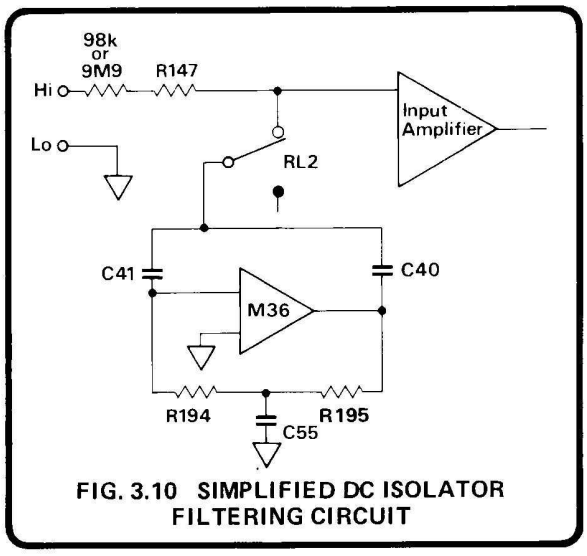

FIG. 3.10 SIMPLIFIED DC ISOLATOR FILTERING CIRCUIT

3.2.2.5 Input Current (Ib) Compensation (430328 sheets 1 and 5)

During the calibration cycle, the microprocessor notes and stores the zero error due to the bias current (measured in a known source resistor). When DC is selected, this information is recalled by the microprocessor, transferred across the isolation barrier and latched into M13 and M14, see Fig. 3.11.

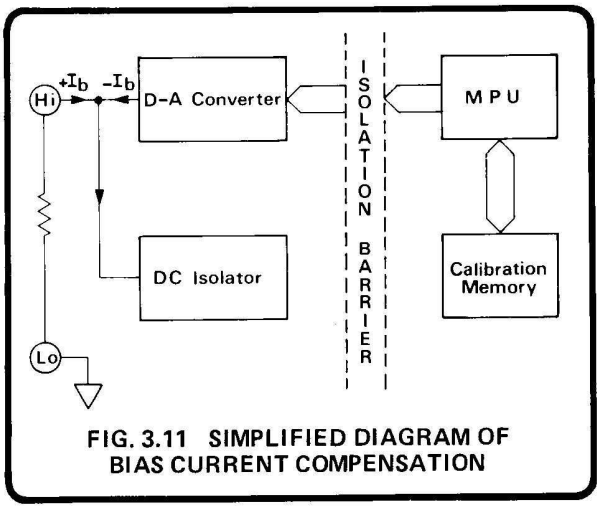

FIG. 3.11 SIMPLIFIED DIAGRAM OF BIAS CURRENT COMPENSATION

The output from the latches is applied to the binary resistor ladder network, AN2, providing a 255 step digital to analog conversion. The analog signal is applied to the inverting input of M3 so that the output drives current, through the diode, to control the current in the corresponding transistor of the opto-isolator, M23. The transistor of the opto-isolator sinks current to the −15V supply until the voltage across R198 is equal to the voltage applied to the inverting input of M3.

The other half of the opto-isolator acts as a current mirror, referenced to the bootstrap (BS) supply. Thus the input current correction is floated on the bootstrap supply, tracking the input signal is divided by R84 to R128 and R129 to null the bias current of the preamplifier.

3.2.2.6 Test (430328 sheets 1 and 5)

During the self-test routine, (actuated from the front panel or remotely programmed) the DC isolator is checked for correct operation. The circuitry is placed into the 0.1V range, as described in 3.2.1.3, except that relay RL1 is not energized, (i.e. the ÷ 100 attenuator is across the input amplifier). Filter is selected and F.E.T. Q5 'closed' via M20-5 causing a small signal to be injected into the feedback path of the input amplifier. Thus a signal of −3.125 volts is output from the DC Isolator (TL8). This signal is then measured and compared with a stored value. If the measured signal is within ±6% of the stored value, the test continues with a 1V range check and a 10V range check.

Range	Output signal from DC Isolator (TP13)
0.1V	− 3.125 volts
1V	− 0.2193 volts
10V	− 0.06932 volts

DC Isolator Output Test Voltages

3.2.3 Analog to Digital Conversion (Analog Section) (430328 sheets 3 and 4)

3.2.3.1 General Principles

Section 1 and Fig. 1.2 of the User's Handbook gives a very basic description of the principles of the integration involved. The technique used in the Autocal Voltmeter is a quadruple slope, the two extra slopes being towards the end of the signal and reference integration periods respectively.

Fig. 3.12 is a simplified diagram showing the essentials of the analog section of the A - D conversion and should be used with timing diagram Fig. 3.13 for full appreciation of the circuit operation.

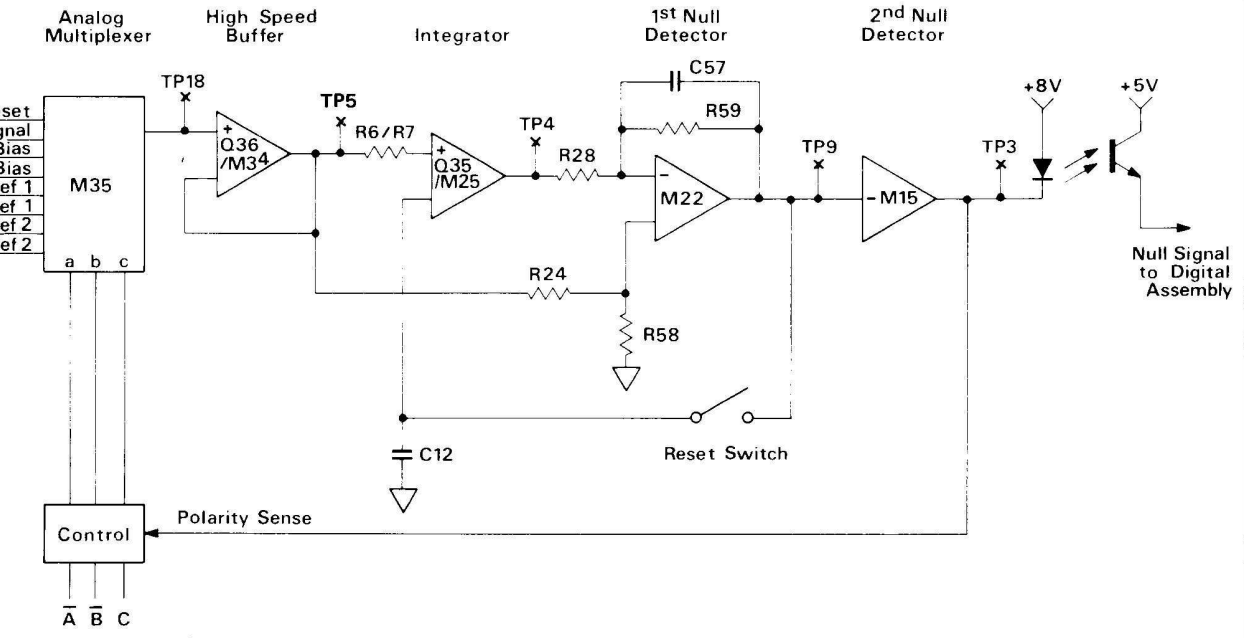

FIG. 3.12 SIMPLIFIED DIAGRAM OF ANALOG SECTION OF A – D CONVERTER

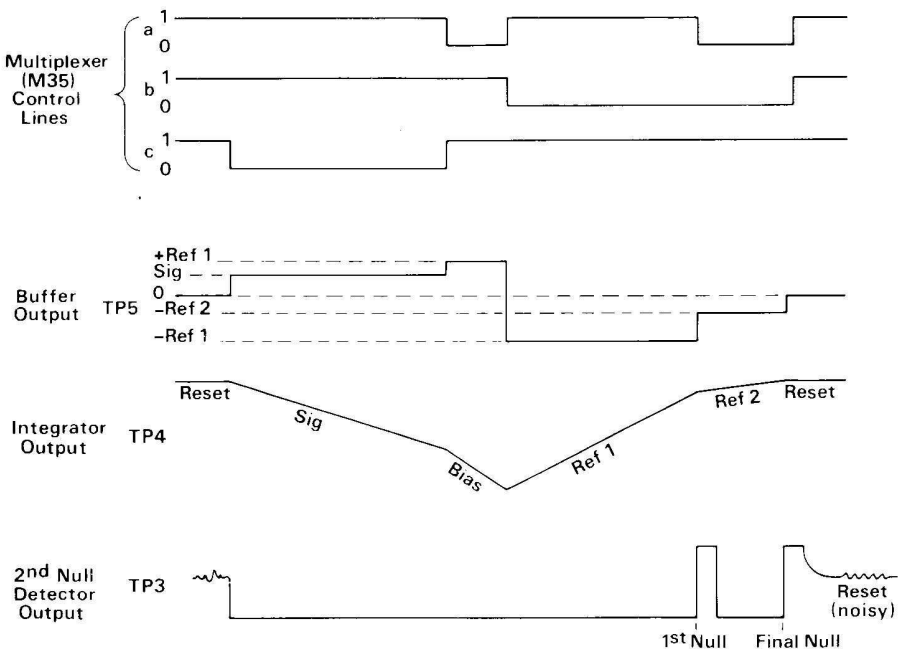

FIG. 3.13 TIMING DIAGRAM FOR ANALOG SECTION OF A – D CONVERTER
(Positive Signal)

3.2.3.2 A - D Input Control

The analog signal from the DC Isolator is applied to the analog multiplexer (M35) and fed to the input of the buffer (Q36/M34). This in turn feeds the signal to the integrator comprising of Q35, M25 and C9.

Control of the multiplexer is derived from the Digital assembly via opto-isolators M4, M5 and M6. These signals control the sequence of events, allowing first the signal, then a bias voltage of the same polarity as the signal, followed by opposite polarity reference and reference ÷16 signals to the buffer and integrator. The multiplexer is then placed in a reset condition ready for the next measurement cycle. Fig. 3.14 gives the multiplexer control line sequence for both positive and negative signals.

STATE	a	b	c	STATE	a	b	c
RESET	1	1	1	RESET	1	1	1
SIG	1	1	0	SIG	1	1	0
+ BIAS	0	1	1	−BIAS	0	1	0
−REF 1	1	0	1	+REF 1	1	0	0
−REF 2	0	0	1	+REF 2	0	0	0
RESET	1	1	1	RESET	1	1	1
	Positive signal				Negative signal		

Logic levels : (0 ≡ −8V, 1 ≡ +8V)

Fig 3.14 MULTIPLEXER CONTROL LINE SIGNALS

3.2.3.3 Reference Voltages and Control Logic Power Supply

REF 1 : The two halves of M39 in conjunction with zener diodes D60 and D59 form the positive and negative reference voltages respectively, D65 and D64 being 'start-up' diodes (see Fig. 3.15). The outputs of M39 (+11 and −11 volts) supply the defined current for the reference zeners via R212 and R38 respectively. R19 and R18 are selected by Datron so that each zener has zero voltage/temperature coefficient.

The resistor chains R42-R43 and R89-R90 are binary weighted values allowing the set up of the exact nominal REF 1 voltages, of ±6.42V, by cutting the appropriate links.

REF 2 : The second reference is 1/16th of REF 1. The positive and negative REF 1 voltages are divided by R71, R68 and R214, R70 respectively.

The power supplies for the logic circuits M35, M29, M27, M28 and opto-isolators M1, M4, M5 and M6 are also derived from M39 via zener diodes D61 and D62, giving supply voltages of ±8 volts.

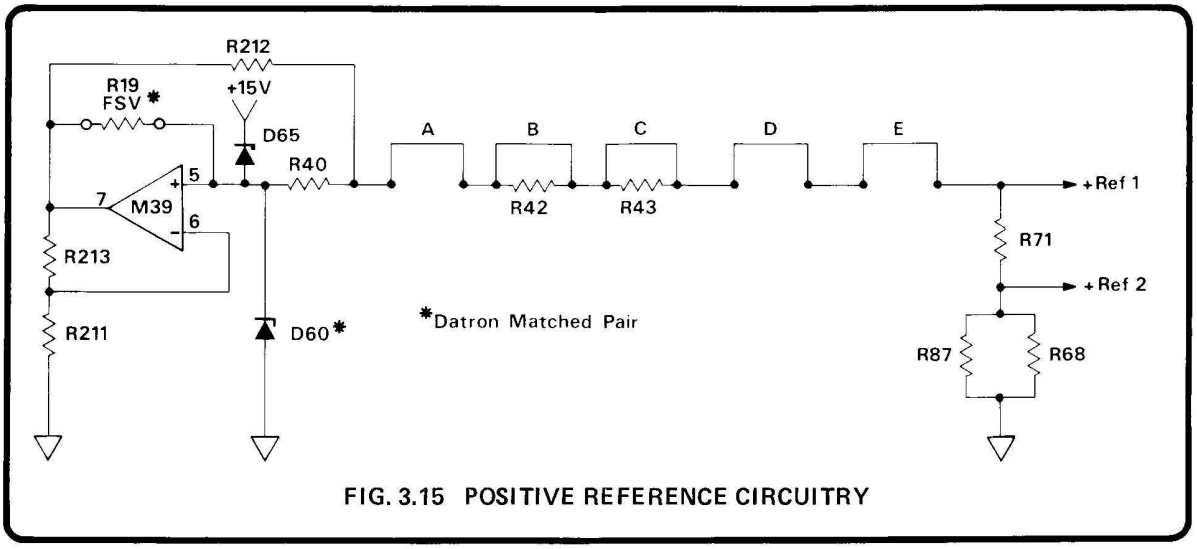

FIG. 3.15 POSITIVE REFERENCE CIRCUITRY

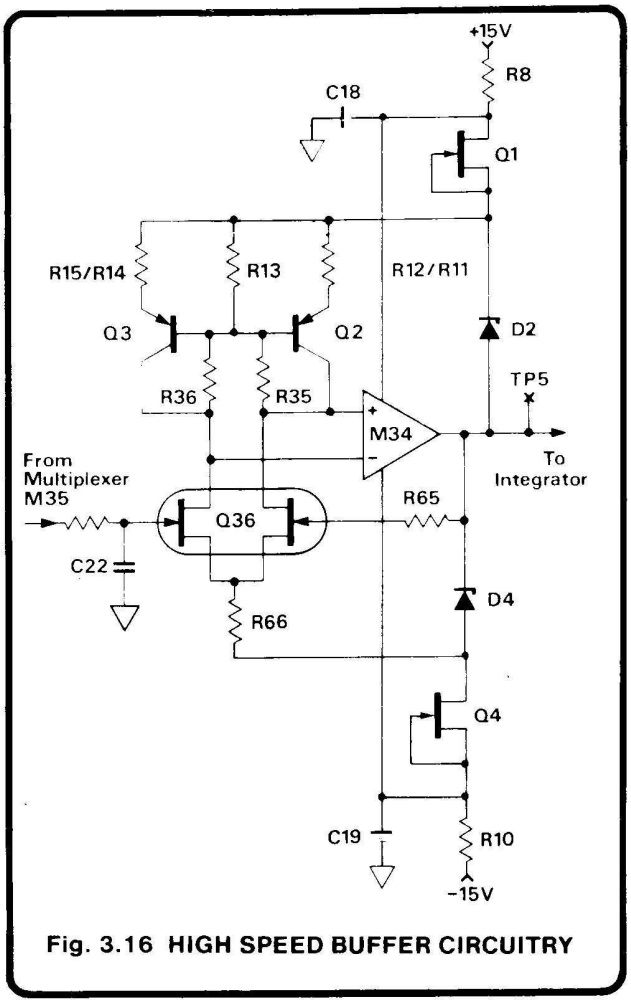

Fig. 3.16 HIGH SPEED BUFFER CIRCUITRY

3.2.3.4 High Speed Buffer

C22 slows the switching edges from the multiplexer M35 so that the buffer cannot slew-limit and thus lose the charge. The signals are fed to Q36, M34 which comprise a high speed buffer with high common mode rejection ratio (See Fig. 3.16). The common mode rejection is dependent on the power supplies of Q36 (from R66 and R11-R15) being bootstrapped to the output of the buffer, via D2 and D4. Thus the difference between input signal and power supply around the input stage is maintained constant whatever the input signal.

3.2.3.5 Integrator

The basic Integrator comprises R6, R7 and C9, with hybrid amplifier Q35 and M25. (See Fig. 3.17). Low-noise FET-pair Q35 also has low gate leakage, which maintains the effectiveness of 'sample-and-hold' components R34 and C12.

An inverted and attenuated version of the integrator output voltage is developed across R5. This is applied via R4 and C10 to compensate for the small amount of dielectric absorption in C9. The value of R5 is factory-selected to equalize readings of the same input, taken at differing read-rates (including 'one-shot' measurements).

C11 and R27 provide shorter term compensation, R23 being set to correct linearity at 10% of full range.

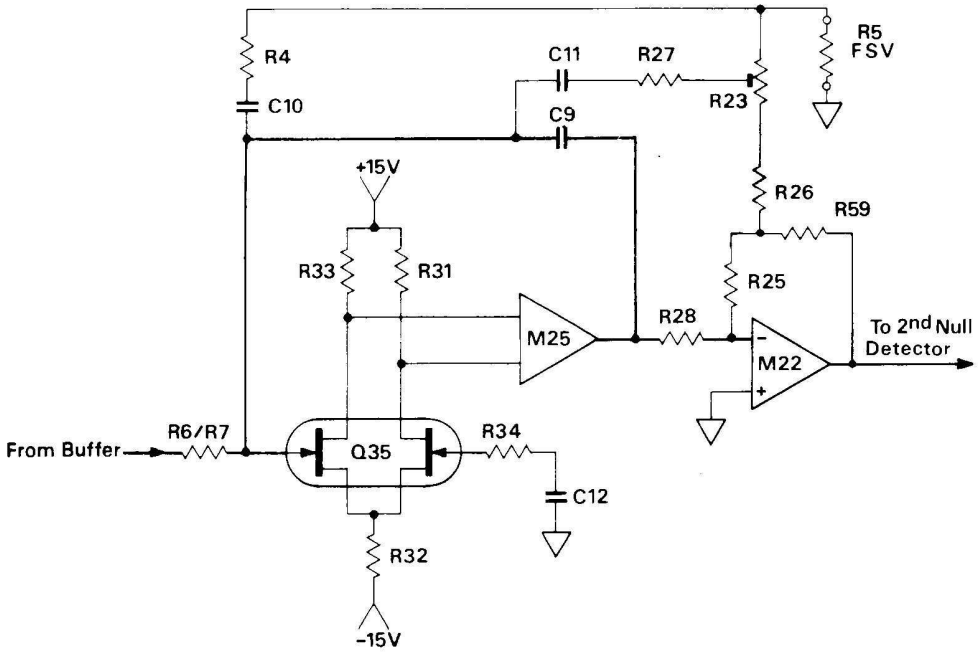

Fig. 3.17 INTEGRATOR CIRCUIT

3.2.3.6 1st Null Detector

The 1st null detector comprises a low noise amplifier, M22, an inverting configuration, where the dc gain is controlled by the ratio of R59 to R28 for small inputs. For larger inputs from the integrator the clamp diodes, D1 and D3, prevent the amplifier from saturating.

During REF 1 the non-inverting input is offset by approximately 10mV to determine the point at which REF 2 is applied (after counting is synchronised). In REF 2 the offset reduces by a factor of 16 giving the null reference point.

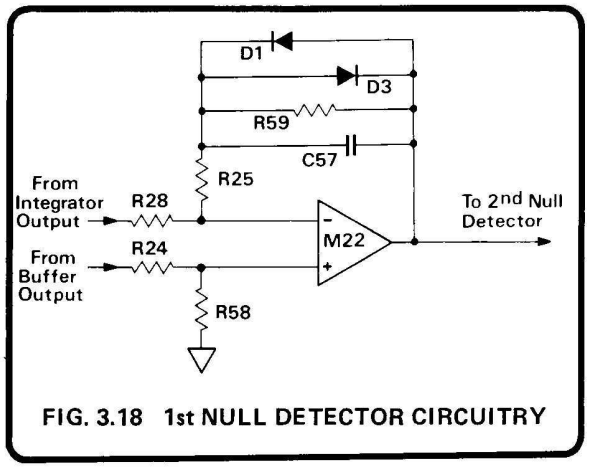

FIG. 3.18 1st NULL DETECTOR CIRCUITRY

3.2.3.7 2nd Null Detector

The signal from the 1st null detector is applied to M15 which boosts the voltage gain. The output provides a logic drive signal via opto-isolator M1, signalling the digital circuitry whenever a null condition changes, Fig. 3.19.

When in an averaging mode (Input Zero or CAL Zero selected; or for 1061A only, with 'Input Filter' and DC, AC Option 12, or Ohms selected) the second null detector is offset a small amount in a cycle of 16 steps (See Fig. 3.20). This offset is produced from the digital to analog converter M28, which is enabled by the level-shifted $\overline{AVE}$ signal from M20-5, and clocked from M6, the C control opto-isolator.

3.2.3.8 Reset Period

At the end of a measurement cycle or in hold, the circuitry is placed into a reset condition. The control lines of the multiplexer M35 allows the 0 volts reference input, at pin 4, to be connected to its output. (See Fig. 3.21). At the same time the reset line (M27-3) is taken high turning on M26. This reset signal, applied to pins 5 and 12 of M26, allows the output of the 1st null detector to be fed back via R60 to a sample and hold capacitor C12 on the integrator.

Thus, with the input to the A - D converter at zero volts, the charge stored on C12 is the sum of all the offsets from the multiplexer, buffer, integrator and 1st null detector, allowing the 1st null detector to indicate the true zero crossing (null) point.

The reset signal applied to M26 pins 6 and 13 merely allows a lower impedance path between the buffer and the integrator to speed up the settling time as C9 is discharged to zero.

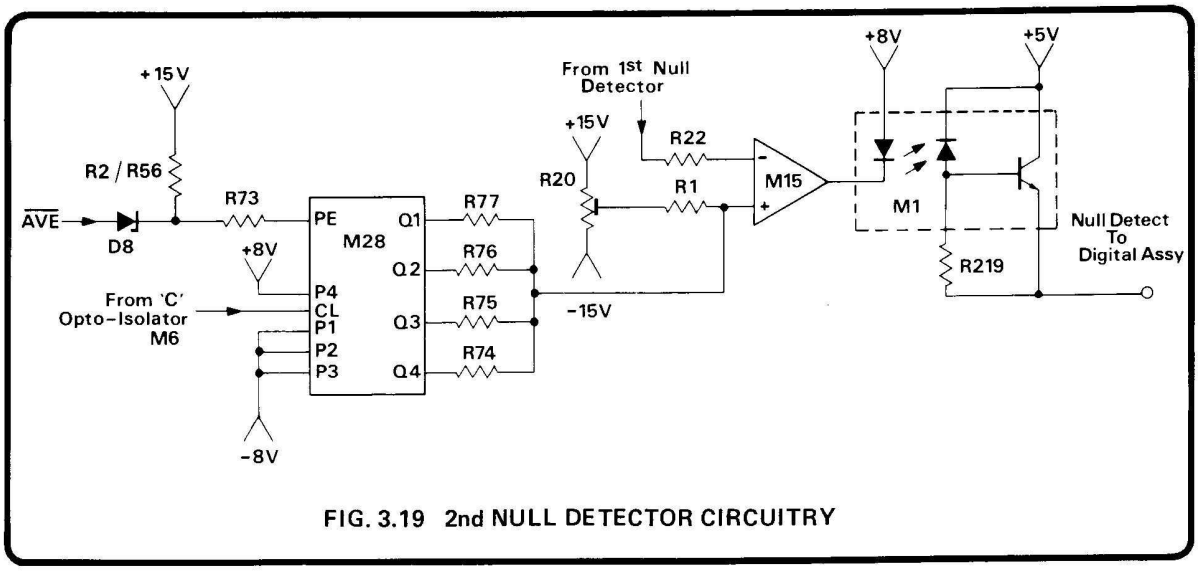

FIG. 3.19 2nd NULL DETECTOR CIRCUITRY

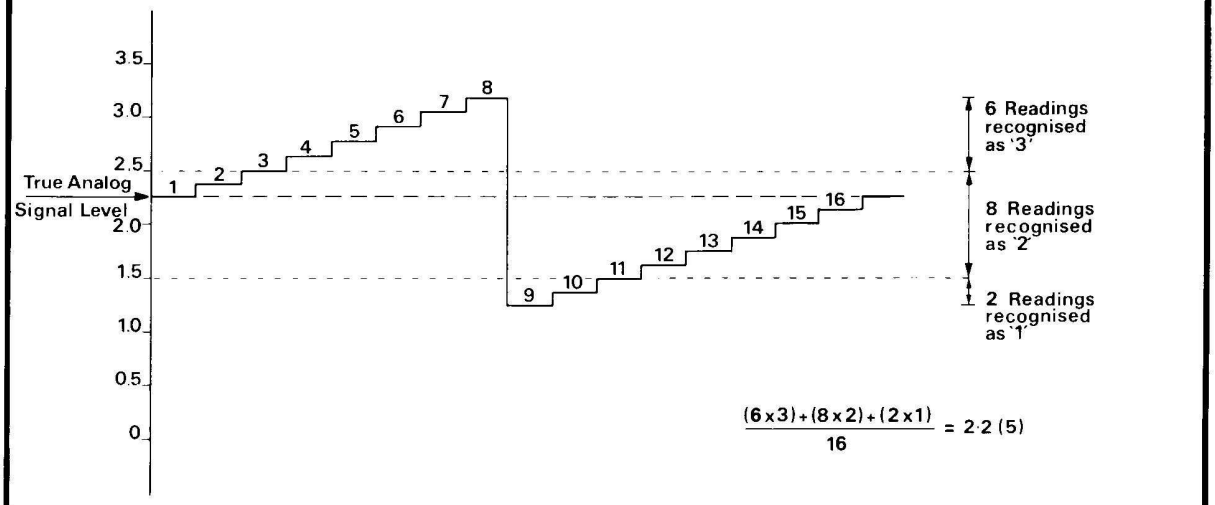

FIG. 3.20 DIAGRAM OF AVERAGING PROCESS

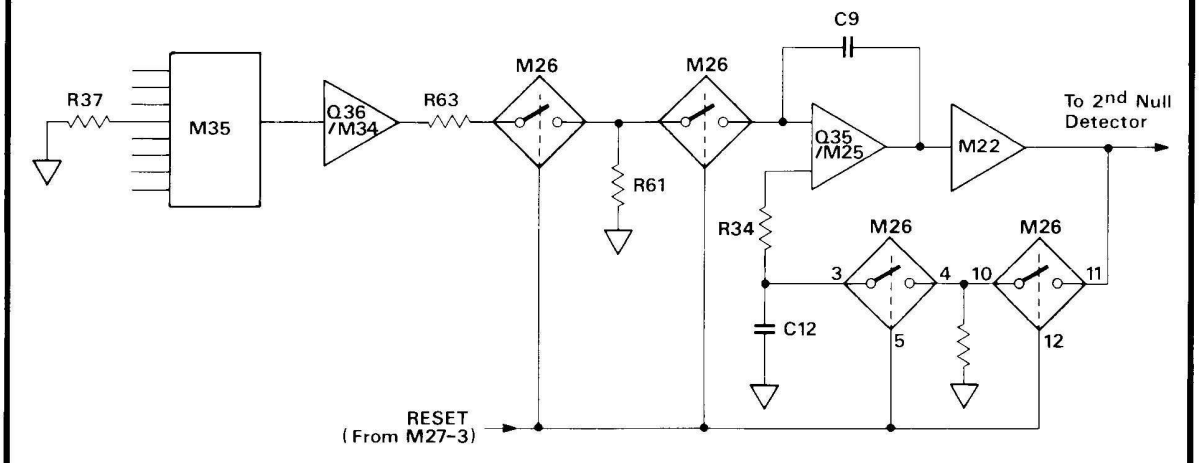

FIG. 3.21 SIMPLIFIED DIAGRAM OF A – D DURING RESET PERIOD

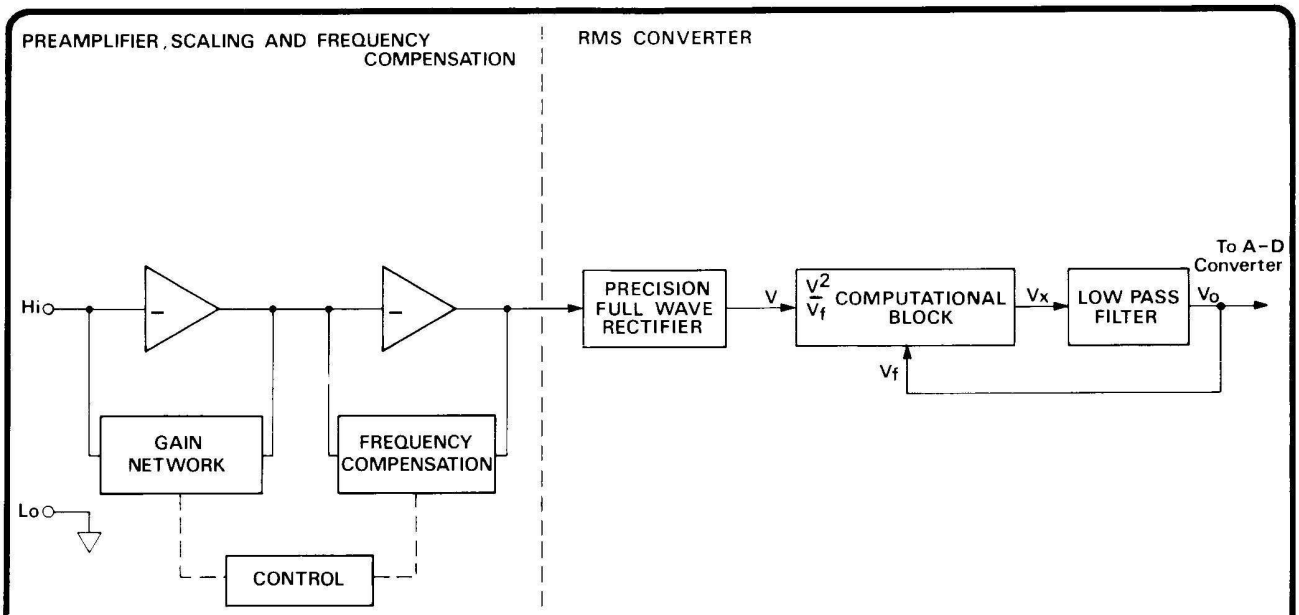

FIG. 3.22 SIMPLIFIED DIAGRAM OF AC CONVERTER

3.3 OPTION 10 AC ASSEMBLY (Circuit Drawing No. 430402)

(For OPTION 12 see page A27)

3.3.1 General Principles

The preamplifier buffers and ranges the signal in order to present 0.9 volts full range to the AC to DC converter section.

Once converted to an equivalent DC signal, it is applied to the analog to digital converter on the main analog assembly.

The conversion technique is electronic true RMS sensing as shown in the simplified block diagram Fig. 3.22. The Datron RMS module can be best considered as a functional block consisting of circuitry which accepts two inputs, V and V_f, computes V^2/V_f and has an output of V_x which is then filtered so that all the AC components are removed. The output of the block is fed back to V_f, thus closing the loop around the whole circuitry.

Mathematically: $\overline{V_x} = V_o$

but $V_x = V^2/V_f$

$\overline{V^2}/V_f = V_o$, but $V_o = V_f$

$\overline{V^2} = V_o^2$

i.e. $V_o = \sqrt{\overline{V^2}}$

3.3.2 Preamplifier and Scaling (430402 sheet 1)

Relay RL2 is energised on selection of AC, directly connecting the Hi terminal to the input of the AC assembly. If DC and AC are selected together, the AC assembly becomes DC coupled by energising RL3, causing C57, the AC coupling capacitor, to be by-passed.

The signal is then fed to the switched gain inverting preamplifier whose full range output is 0.9 volts r.m.s. A simplified diagram of this arrangement is shown in Fig. 3.23. The frequency response is held flat, to within ±1%, by controlling the gain defining component time constants, to a similar order of accuracy. Residual errors are removed by the frequency compensation stage. (See section 3.3.4).

The preamplifier has a stable DC path provided by a dual transistor pair Q33 and a fast AC path by dual F.E.T.'s Q32 and Q34. Further gain is provided by the following long-tail pair cascade of Q20, Q21, Q22 and Q23, which is loaded by a current mirror, Q24. Q15 and Q16 with bias components Q17 and Q18 form a conventional class AB output stage. R121 compensates for the bias current of Q33, whileR112 trims the offset voltage to zero.

The unity gain frequency compensation amplifier consists of a stable DC path, provide by M11, and a fast AC path provided by Q25 to Q29. The bootstrap circuit of Q19 presents the varicap diode, D11, with a high impedance, thus ensuring that the varicap is not shunted to ground.

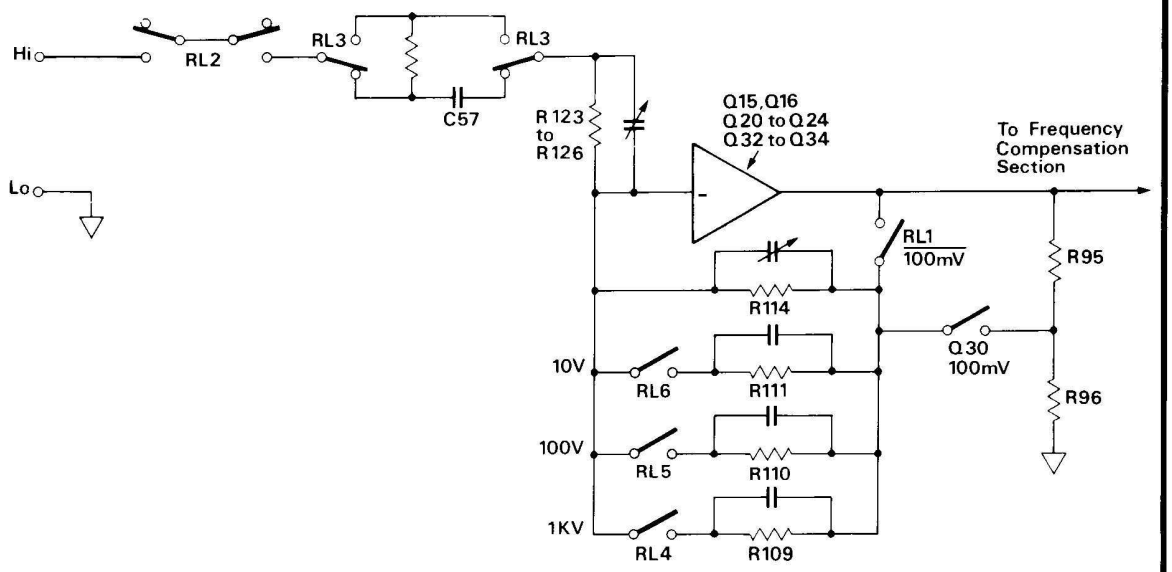

FIG. 3.23 SIMPLIFIED DIAGRAM OF THE AC PREAMPLIFIER SCALING

3.3.3 RMS Converter (430402 sheet 2)

The RMS converter takes the scaled AC signal from the preamplifier and converts it to an equivalent DC signal suitable for Analog-to-Digital conversion. The conversion technique is electronic true RMS sensing as shown in the simplified block diagram Fig. 3.25.

M8 and M9 form a summing type, full wave rectifier. The output of M8, a precision half-wave rectifier inverter, is summed with the non-inverted signal with a weighting of 2 : 1 at the input of M9. This forces a full-wave rectified current to flow in RMS module M6. Potentiometer R50 balances the rectifier to provide the same output for non-inverted or inverted asymmetric waveforms.

The output current from the RMS module passes into filter-buffer M1 and is converted to a nominal 5 volts for a full range signal. Q1 and Q2 switch in additional capacitors when FILTER is selected, to operate down to 45Hz. M2 is a voltage to current converter providing a feedback current to the RMS module proportional to the output voltage. R90 is the zero adjustment for the half wave rectifier M8 and R35 is the high crest factor gain adjustment. R75 is adjusted for optimum linearity.

The output of M1 (TP2) is fed to a resistor chain R1 - R7, to provide an output of 3.14 volts by the selection of resistors R2 - R5. Q3 is turned on when AC is selected and switches the output of the AC converter into the Analog-to-Digital Converter (Drawing No. 430328 sheets 3 and 4).

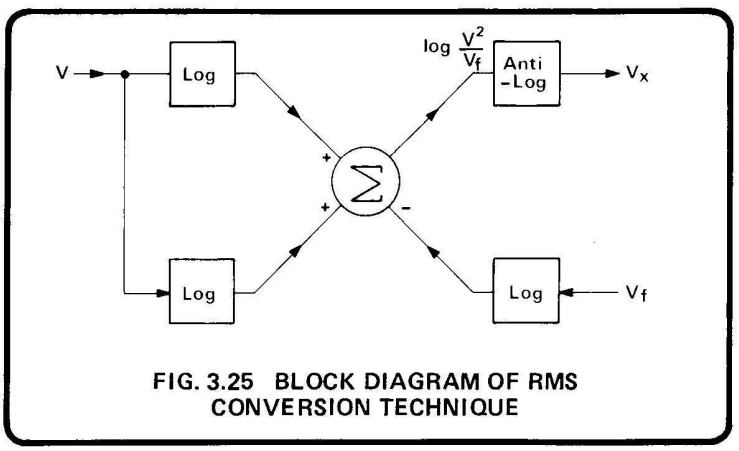

FIG. 3.25 BLOCK DIAGRAM OF RMS CONVERSION TECHNIQUE

3.3.4 High Frequency Compensation

During the calibration cycle, the microprocessor notes and stores the high frequency (HF) error of each range. When AC volts is selected the compensation information for a particular range is recalled by the microprocessor, transferred across the isolation barrier and latched on to M13, M14 (Drawing No. 430328 sheet 5), see Fig. 3.26. As in the case of the Input Current Compensation (section 3.2.2.5), the output from the latches is applied to a digital-to-analog converter, AN2. The voltage produced is fed to the AC converter via connector J1 pin 11 and applied to varicap D11. The varicap is thus adjusted to give the amplifier chain a flat frequency response.

The calibration is carried out at one H.F. frequency but since it flattens the AC amplifier response, the correction is valid for all specified frequencies. It should be noted that the calibration routine is iterative since the varicap is non-linear.

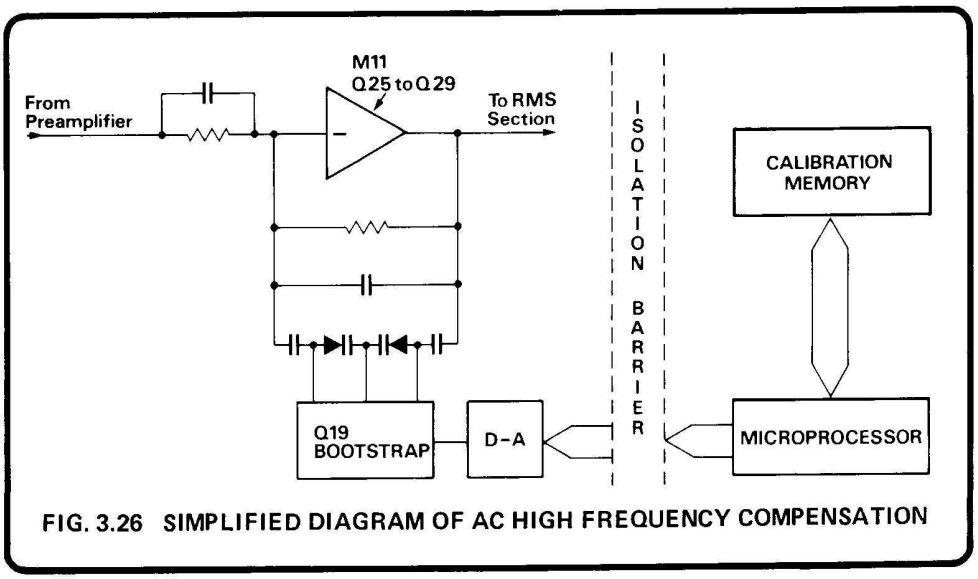

FIG. 3.26 SIMPLIFIED DIAGRAM OF AC HIGH FREQUENCY COMPENSATION

3.3.5 Frequency Detection (430402 sheet 2)

The signal frequency is monitored by M10 which is set so that a signal frequency greater than 5kHz causes a logic '1', (0 volts) on M10 - 4. This signal indicates to the Digital Board via M18, M2 (Drawing No. 430328 sheet 5) which one of the two sets of specifications should be used for calculating the measurement uncertainty when the Spec key is depressed.

3.3.6 Test

During the self-test routine (actuated from the front panel or remotely programmed) the AC assembly is checked for correct operation. The circuitry is placed into the .1V range as described in Section 3.2.1.3. Filter is selected and F.E.T. Q31 is 'closed' from M5 - 13 causing a signal of 0.08 volts DC to be injected into the preamplifier. Thus a signal of approximately 3.14 volts is output from the RMS section and applied to the A - D converter situated on the Analog assembly. This signal is then measured and compared with a stored value. If the measured signal is within ±6% of the stored value, the test continues with a 1V range check.

Range	Output from RMS section
.1	+3.14 volts
1	+0.314 volts

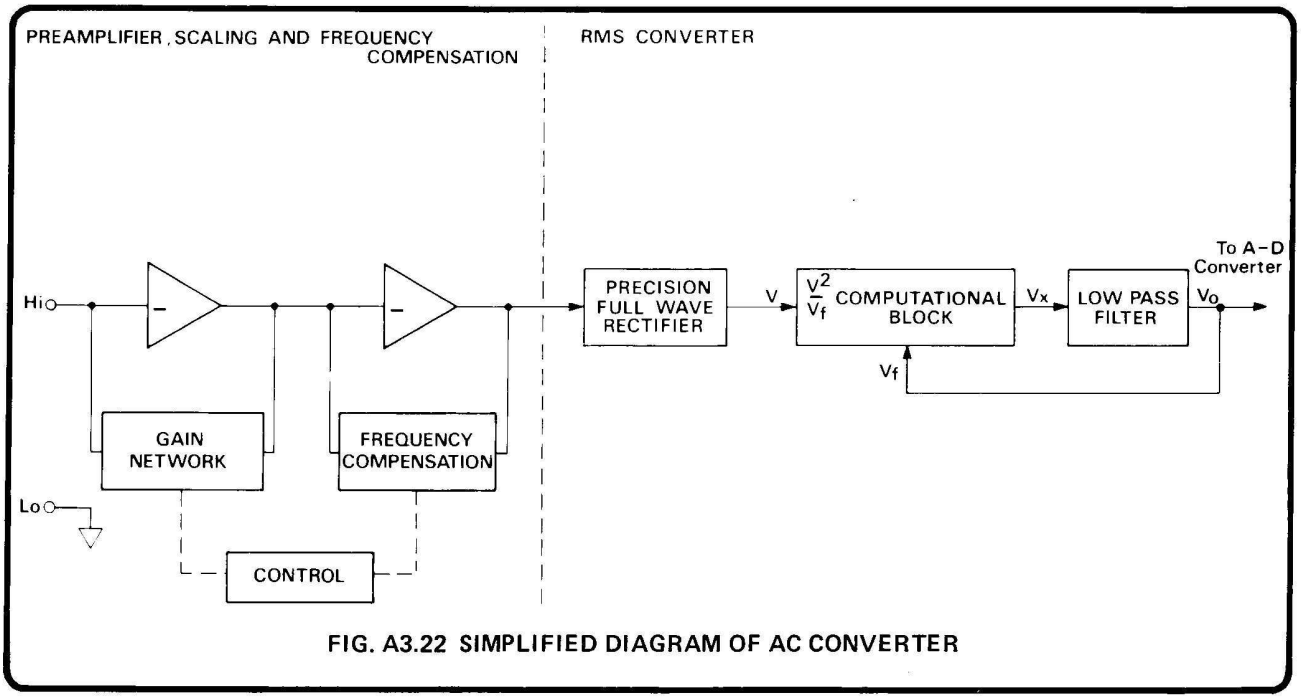

FIG. A3.22 SIMPLIFIED DIAGRAM OF AC CONVERTER

A3.3 OPTION 12 AC ASSEMBLY (Circuit Drawing No. 430552)

(For OPTION 10 see page 27)

A3.3.1 General Principles

The preamplifier buffers and ranges the signal in order to present 0.9 volts full range to the AC to DC converter section.

Once converted to an equivalent DC signal, it is applied to the analog to digital converter on the main analog assembly.

The conversion technique is electronic true RMS sensing as shown in the simplified block diagram Fig. A3.22. The Datron RMS module can be best considered as functional block consisting of circuitry which accepts two inputs, V and V_f, computes V^2/V_f and has an output of V_x which is then filtered so that all the AC components are removed. The output of the block is fed back to V_f, thus closing the loop around the whole circuitry.

Mathematically: $\overline{V_x} = V_o$

but $V_x = V^2/V_f$

$\overline{V^2}/V_f = V_o$, but $V_o = V_f$

$\overline{V^2} = V_o^2$

i.e. $\underline{V_o = \sqrt{\overline{V^2}}}$

A3.3.2 Preamplifier and Scaling (430552 sheets 1 & 2)

When the AC option is selected, the AC preamplifier is connected in parallel with the 1000 Volt range of the DC isolator. The resultant impedance presented at the input terminals is a resistance of 1MΩ, shunted by 150pF.

Relay RL2 is energized on selection of AC, directly connecting the Hi terminal to the input of the AC assembly. If DC and AC are selected together, the AC assembly becomes DC coupled by energizing RL3, causing C77, the AC coupling capacitor, to be by-passed.

The signal is then fed to the switched gain inverting preamplifier whose full range output is 0.9 volts r.m.s. A simplified diagram of this arrangement is shown in Fig. A3.23. The frequency response is held flat, to within ±1%, by controlling the gain defining component time constants, to a similar order of accuracy. Residual errors are removed by the frequency compensation stage. (See section 3.3.4).

The main amplifier M22 responds to signals from DC to above 1MHz. Its input buffer Q36 reduces bias current errors. A chopper-stabilized amplifier M21 nulls the offset of Q36. Filter components R123 and C90 eliminate the effects of current 'kickback' from M21 to the main signal path. M22 output (Test link TLK) is fed directly to the unity gain frequency compensation stage.

C88 and C89 decouple R160 and R162 except on the 100mV range, when Q33 and Q34 are switched off to provide greater open loop gain. To ensure stability at the higher feedback levels required for the 10V, 100V, and 1000V ranges; C73 is switched in by Q32 to decouple M22 non-inverting input, further reducing the open loop gain.

The unity gain frequency-compensation amplifier includes a stable DC path M20, and a fast AC path Q28 and Q29. The capacitance of varicap diode D14 is determined by the bias voltage at J1-11. The bootstrap circuit of Q17/Q21 ensures that both halves of the varicap are subjected to the same AC signal, removing the non-linearity of the voltage-capacitance characteristic.

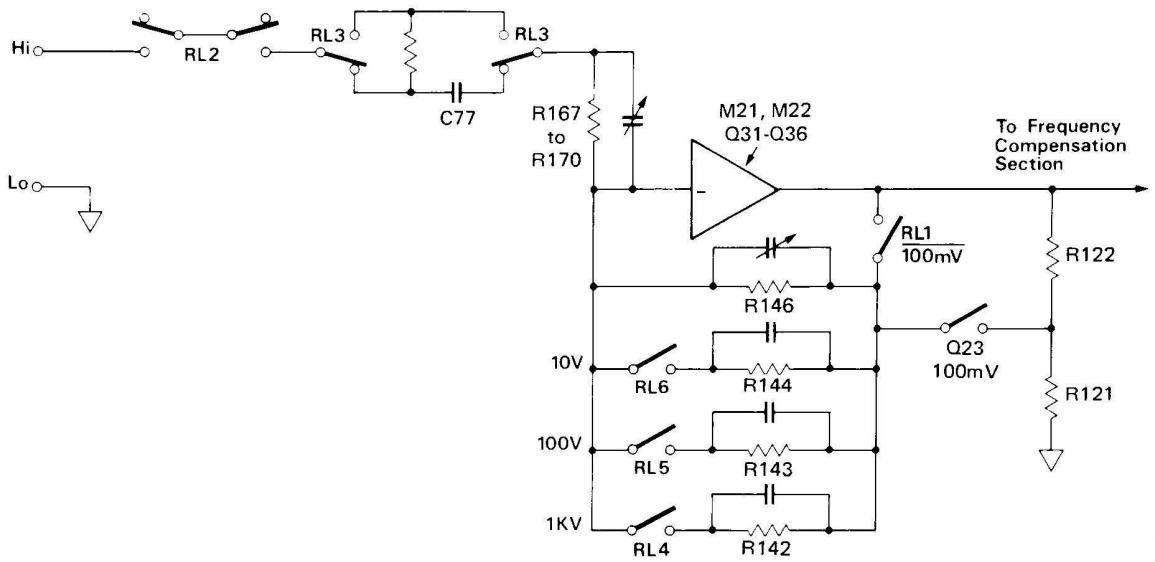

Fig. A3.23 SIMPLIFIED DIAGRAM OF THE AC PREAMPLIFIER SCALING

A3.3.3 RMS Converter (430552 Sheets 2 & 3)

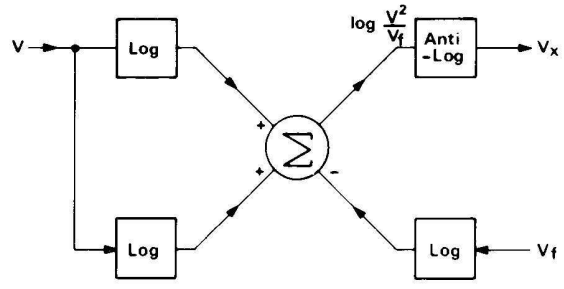

Fig. A3.25 BLOCK DIAGRAM OF RMS CONVERSION TECHNIQUE

The RMS converter takes the scaled AC signal and converts it to an equivalent DC signal suitable for Analog-to-Digital conversion. The technique used is Electronic True RMS Sensing as shown in the simplified block diagram Fig. A3.25.

M13 and M14 form a summing full-wave rectifier. The output of precision half-wave rectifier M13 is summed with the non-inverted signal at the input of M14, with a weighting of 2:1. This forces an accurately rectified full-wave current to flow in RMS module M11. Potentiometer R62 adjusts the rectifier symmetry to provide the same output for signals of either polarity.

The output current from the RMS module drives the low pass current-to-voltage converter M10/M13, which generates a nominal 0.5 Volts for a full range signal. (Note that M10, M9 and M4 are chopper-stabilized amplifiers to handle the low signal voltages).

M16 is the active element of a switched 3-pole Bessel filter. M15 and M17 switch the time constants, extending the overall low-frequency response down to 10Hz (See Fig. A3.24), when 'Filter' is selected.

The high impedance output from the 3-pole filter is buffered by M9/M2, and the other half of M2 provides a bootstrap for M9 input. D26 and D16 prevent the voltage on TL A from exceeding the +5V power rail, providing overload protection.

The buffer output voltage (3.12V full range) is developed across R52-R56 and R70, referred to Output Common at M4 input. Log-feedback stage M4/M3 closes the 'Square-Root' loop, providing feedback current for the RMS computation in M11.

When the AC, or DC-coupled AC option is selected, Q3 connects the buffer output to the Analog-to-Digital converter. Test links TLC, D, E and F are selectively removed at manufacture to set the correct output level.

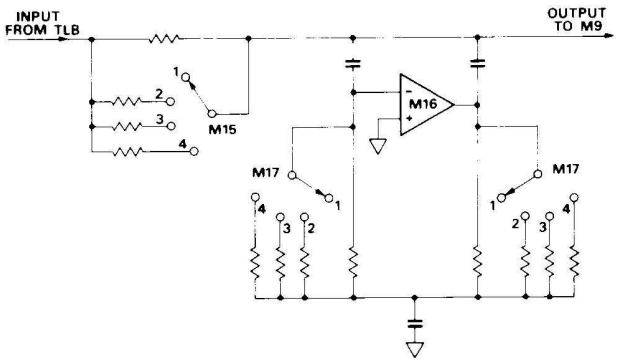

Fig. A3.24 SIMPLIFIED DIAGRAM OF AC FILTERS

A3.3.4 High Frequency Compensation

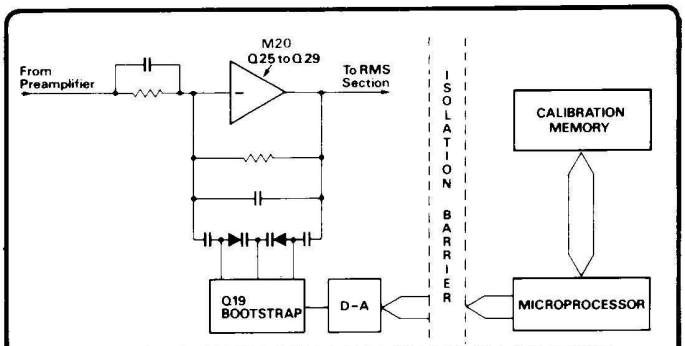

Fig. A3.26 SIMPLIFIED DIAGRAM OF AC HIGH FREQUENCY COMPENSATION

During the calibration cycle, the microprocessor notes and stores the high frequency (HF) error of each range. When AC volts is selected the compensation information for a particular range is recalled by the microprocessor, transferred across the isolation barrier and latched on to M13, M14 (Drawing No. 430328 sheet 5), see Fig. 3.26.

The output from the latches is applied to a digital-to-analog converter, AN2. The voltage produced is fed to the AC converter via connector J1 pin 11 and applied to varicap D14. The varicap is thus adjusted to give the amplifier chain a flat frequency response.

The calibration is carried out at one H.F. frequency but since it flattens the AC amplifier response, the correction is valid for all specified frequencies. It should be noted that the calibration routine is iterative since the varicap is non-linear.

A3.3.5 Frequency Detection (430552 sheet 2)

The signal frequency is monitored by M10 which is set so that a signal frequency greater than 2kHz causes a logic '1', (0 volts) on M19-4. This signal indicates to the Digital Board via M18, M2 (Drawing No. 430328 sheet 5) which one of the two sets of specifications should be used for calculating the measurement uncertainty when the Spec key is depressed.

A3.3.6 Test

During the self-test routine (actuated from the front panel or remotely programmed) the AC assembly is checked for correct operation. The circuitry is placed into the .1V range as described in Section 3.2.1.3. F.E.T. Q31 is 'closed' from M7-13 causing a signal of 0.08 volts DC to be injected into the preamplifier. Thus a signal of approximately 3.14 volts is output from the RMS section and applied to the A - D converter situated on the Analog assembly. This signal is then measured and compared with a stored value. If the measured signal is within ±6% of the stored value, the test continues with a 1V range check.

Range	Output from RMS section
.1	+3.14 volts
1	+0.314 volts

3.4 OHMS ASSEMBLY (Circuit Drawing No. 430331)

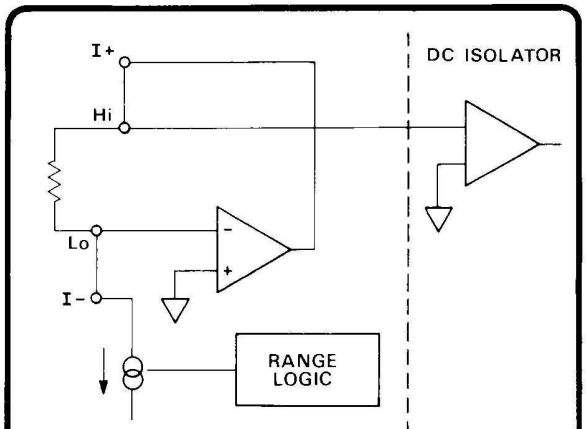

FIG. 3.27 SIMPLIFIED RESISTANCE CONVERTER

The instrument functions by measuring the voltage across an unknown resistance with a known constant current flowing in it. The converter can be split into two parts: a low drift voltage follower and a constant current source covering 6 decades from 100nA to 10mA (see Fig. 3.27).

It should be noted that when the Ohms assembly is fitted the DC Isolator Lo is no longer directly connnected to the front/rear panel Lo terminal, but goes via RL1 on the Ohms assembly (connector link removed on side panel). Lo becomes an active terminal in resistance measurements.

3.4.1 Low Drift Voltage Follower

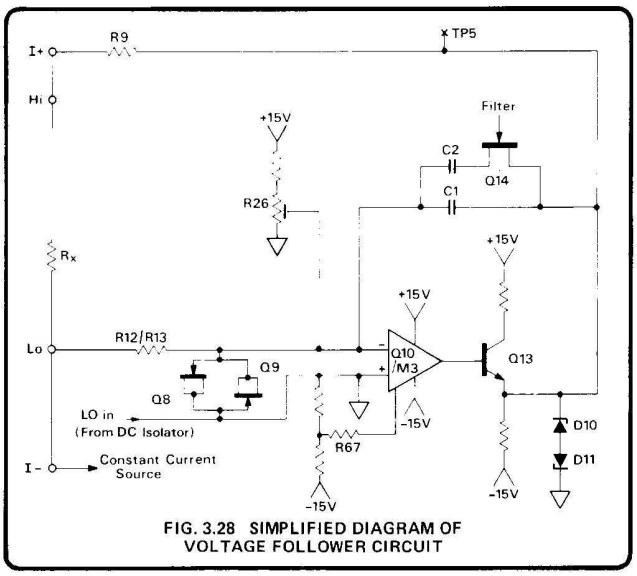

FIG. 3.28 SIMPLIFIED DIAGRAM OF VOLTAGE FOLLOWER CIRCUIT

When OHMS is selected, the front panel Lo terminal is connected to the –ve input of amplifier Q10/M3, the +ve input being referred to DC isolator Lo (this remains reference common). Q10/M3 together with output follower Q13, will thus apply a voltage at the I+ terminal via RL1 such that the voltage at front panel Lo is at reference common plus any offset due to Q10/M3. This voltage offset drift is kept small for changes of temperature by compensating the input bias current of Q10 with the current in R67, which changes with temperature due to the voltage drift at Q10 emitters. Q10 input bias current is initially nulled by R26.

Thus if we consider 2-wire measurement, I+ is linked to Hi, I– is linked to Lo and the unknown resistance linked between Hi and Lo, with a constant current flowing from I+/Hi, through the unknown resistance (R_x) to Lo/I–. The Lo terminal is maintained at 0V. Therefore the Hi terminal (DC Isolator Input) is at $I_{constant} \times R_x$ volts above Lo. As long as the error is small referred to reference 0, the DVM will read the correct resistance.

Input protection is provided as follows:–

Voltage/Current applied to input terminals:

I+	R9, D10, D11
I–	R2, D1, D2, Q25, R23
Lo	R12, R13, Q8, Q9

Open circuit voltage limit protection:

I+	R15, R16, Q6, Q7
I–	R6, D7, D8, Q2, Q22

3.4.2 Constant Current Source

Seven decades of ohms ranges are provided by 6 ranges of current and 2 ranges of DC Isolator voltage gain (100mV range for 10Ω, 1V range otherwise). See Fig. 3.29.

When kΩ's is selected, Q17 (sheet 2) is turned on enabling astable M6 to produce a 200Hz signal to switch M5. Thus when gates B and C of M5 are open, C9 is charged up from the negative reference (originating from the analog section of the A - D converter). These gates then close and A and D open, sharing the charge with C8, the voltage across C8 equals the reference voltage (sheet 1).

Range	Current	F.E.T.'s/Switches turned on	
		Current Selector	Leakage path
10Ω	10mA	Q11, M2(A)	
100Ω	10mA	Q11, M2(A)	
1kΩ	1mA	M1(A)	
10kΩ	100μA	M1(B)	
100kΩ	10μA	Q4	M2(B)
1MΩ	1μA	Q1, M1(D)	Q3, M2(C)
10MΩ	100nA	Q1, M1(C)	Q3, M2(C)

FIG. 3.29 OHMS CURRENT RANGE SWITCHING

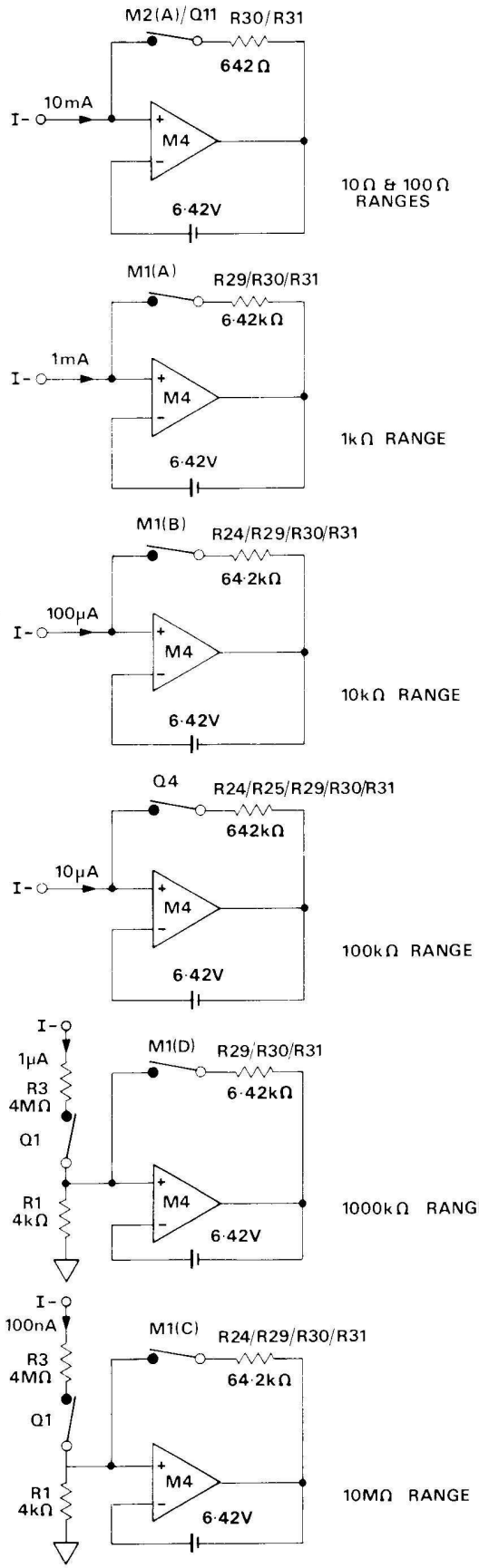

FIG. 3.30 SIMPLIFIED Ω CURRENT SWITCHING

The voltage developed across C8 causes M4 to sink current through resistor chain R24, R25, R29, R30, R31 until the voltage developed across the chain balances that across C8. Thus the current required for a particular range is selected by the value of the resistor chain switched byM1, M2 and Q4. Simplified diagram Fig. 3.30 shows the resistor chain and switching for each range. On the high resistance ranges leakage paths are provided by Q3, M2(B) and M2(C).

To produce good common mode rejection, M4 supplies are bootstrapped, the supply span being defined by a 12 volt zener, D17. The filtered bootstrap supplies (+ΩBS and −ΩBS) power the astable (M6) and bilateral switch.

The use of ohms guard permits in-circuit measurement of resistors, provided shunt paths are greater than 250Ω and a suitable tapping point is available. Consider Fig. 3.31. Guard is reference 0, Lo is actively maintained within microvolts of reference 0 (as previously explained). Thus there is no voltage across Rz and consequently no current in Rz. Voltage follower Q10/M3 will simply pass more current into Ry from the I+ terminal until the selected current for the particular range flows through Rx.

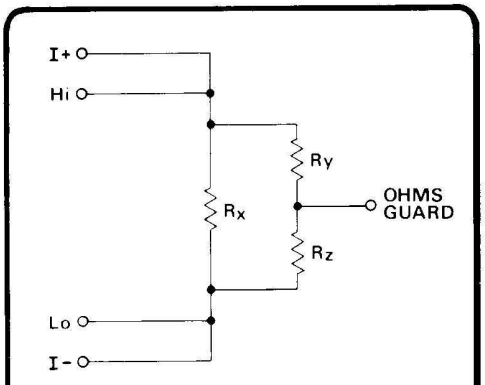

FIG. 3.31 USE OF OHMS GUARD

3.4.3 Test

During the self-test routine (actuated from the front panel or remotely programmed), the Ohms Converter is checked for correct operation. The circuitry is placed into the 10kΩ range as described in Section 3.2.1.3. Filter is selected and F.E.T. Q5 'closed' from M9-1 causing R8 (9.76kΩ) to be placed between I+ and I−. Thus with I+ and Hi, I− and Lo connected (2-wire if front panel input selected), the DC Isolator (which is also in the TEST mode) measures the voltage developed across the resistor (approx 1 volt). The resulting voltage output from the DC Isolator is applied to the A-D converter, measured and compared to the stored value. If the measured signal is within ± 6% of the stored value, the test is complete.

3.5 CURRENT ASSEMBLY (Drawing No. 430304)

The Current assembly contains a set of selectable precision current shunts, the voltage developed across the shunt(s) being sampled by the DC or AC voltage measurement circuits.

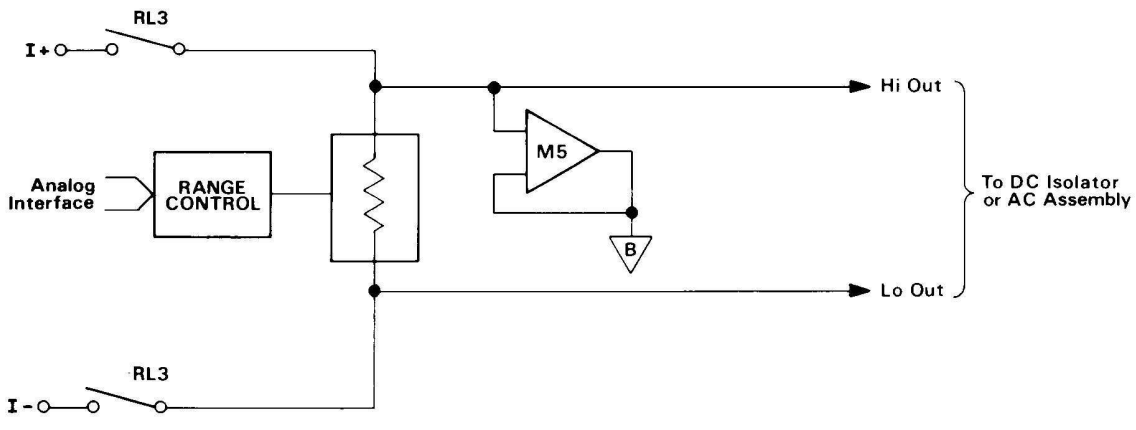

FIG. 3.32 SIMPLIFIED DIAGRAM OF CURRENT ASSEMBLY

3.5.1 Current Measurements

Precision current shunts of 0.1Ω, 1Ω, 9Ω, 90Ω and 900Ω connected in series provide an output of 100mV for a full range signal. To eliminate errors in measurement due to lead or contact resistance, all current shunts are 4-wire sensed i.e. a pair of current leads and a pair of voltage leads to the shunt(s) switched separately. The voltage developed across the shunt(s) is fed to the DC Isolator in DCI and the AC assembly in ACI or DCI + ACI. The latter, DC coupled mode, computing the RMS value of the DC and AC component of the input current. These circuits are placed in the '.1V range' amplifying the signal by 3.16. The output of buffer M5 is used to guard leakage paths on the current board.

Overload protection up to 2 amps is provided by diodes D13 – D16. An input greater than 2 amps causes the current fuse, located on the rear panel, to blow.

3.5.2 Test

During the self test routine, the Current assembly is checked for correct operation. The circuitry is placed into the .1mA DC current range as described in Section 3.2.1.3 with the DC Isolator in the 100mV range. Filter is selected and F.E.T. Q9 closed from M4 – 10 allowing current to flow through R18 to the 100μA range shunts, from the +15V supply. Thus a voltage of approximately 0.3 volts is developed across the shunts and fed to the DC Isolator. This voltage combined with the effect of the voltage injected due to the DC Isolator being in Test (Section 3.2.2.6) causes the output of the DC Isolator to be approximately 5.75 volts. After measurement by the A-D converter, the value is compared to the stored value. If the measured signal is within 6% of the stored value, the test is complete.

3.6 REAR INPUT/RATIO INPUT (Circuit Drawing No. 430307).

3.6.1 General

The Rear Input/Ratio Input assembly contains the switching circuitry to enable one of the three analog signal sources to be connected to the measurement circuits of the DVM. When Rear Input is selected either remotely or on the rear panel of the instrument and the RATIO key is depressed, the switching circuitry, under microprocessor control, selects the ratio (reference) input then the rear (signal) input, taking one valid reading at each stage.

3.6.2 Front Panel/Rear Panel Input

When Front Input is selected, either remotely or on the rear panel, this causes the base of Q1 to be connected to 0 volts, turning on the transistor. Thus relays RL1 and RL2 are energised, causing the front signal input terminals to be connected to the measurement circuits. Should Rear Input be selected, relays RL1 and RL2 are de-energised, connecting the rear input to the measurement circuits.

3.6.3 Ratio

During the last part of the analog interface update sequence (see Fig. 3.6) M1-5 is taken high causing the flip-flop (M1) to be clocked high (0 volts) on pin 1. The signal is applied to Q2 energising the ratio mode input selector relays, RL3 and RL4. Thus the inputs to the 'Ratio Input' on the rear panel are connected to the measurement circuits. Once a valid reading has taken place, the 'Rear Input' lines are connected to the measurement circuits by leaving M1-5 low. This de-energises the relays as Q2 is turned off. Another reading is then taken and the ratio calculated.

3.6.4 Test

When TEST is selected, the ratio option is checked to see if it is fitted, by interrogating the AD4 line to see if it is held high.

3.7 ANALOG OUTPUT (Circuit Drawing No. 430308)

3.7.1 General

The Analog Output Board accepts the DC Isolator or AC Converter Output and converts it to a ±1 volt DC full range output. This signal can then be used, for example, to drive X-Y plotters or strip chart recorders.

3.7.2 Description

The 3.16V full range signal from the DC Isolator or AC Converter is buffered by unity gain amplifier M2. The output is potentially divided by R7 and R8 so that 1 volt full range is presented to M1, another unity gain amplifier. Potentiometer R5 is adjusted to remove any offset caused by M1 and M2. Positive temperature coefficient thermistors R3, R4 and diodes D1, D2, protect the Analog Output circuitry from accidental input applied to the Analog Output external connector.

3.8 DIGITAL ASSEMBLY (Circuit Drawing No. 430329)

The Digital assembly contains the circuitry providing the general management of the instrument and the digital section of the A-D converter. Fig. 3.33 outlines the main portions and signal highways of this board.

3.8.1 Processor and Memory (430329 sheet 1)

A 6800 microprocessor (MPU) together with 16k bytes of memory controls the communication between the front panel, digital interface, display drivers, Digital and analog assemblies. The memory can be split into five main areas:—

(1) Program Memory - needed to operate the whole instrument system.

(2) Constant Data Memory - e.g. Self Test limits, Error read-out specifications and other fixed factors.

(3) Non-volatile Calibration Memory - used to store all the calibration errors used for each reading and determined during the 'Auto-cal' cycle.

(4) Operating Memory - used for scratch pad operations and storing.

(5) Volatile Display Memory - volatile data such as Max-Min stores, Limit stores and computation stores.

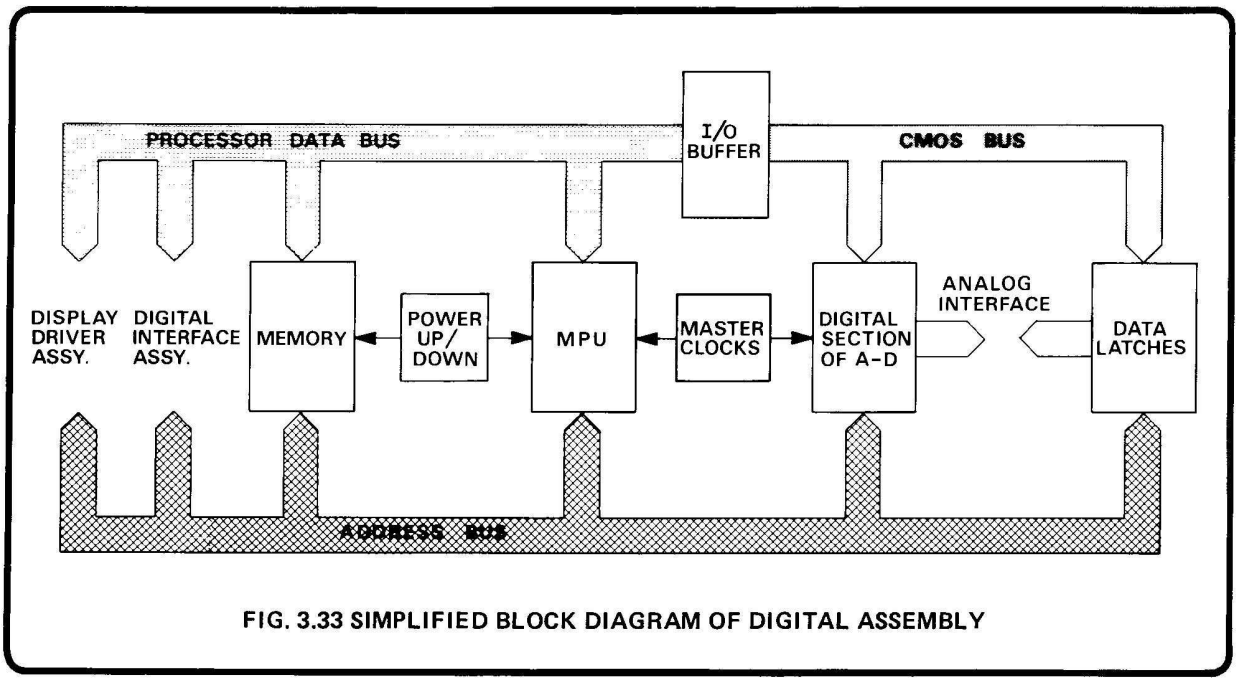

FIG. 3.33 SIMPLIFIED BLOCK DIAGRAM OF DIGITAL ASSEMBLY

3.8.1.1 Software Overview

The system uses the technique of a looping prioritised job scheduler (see Fig. 3.34). Each job driven from the scheduler is controlled by a flag in the system workspace which is set when the job is required to be run and cleared when completed. Priority of activation is ensured by making each job exit on completion, to the top of the schedule.

Program Modules: The program memory is split into a series of functional modules, each module corresponding fairly closely to a major functional area and hence to one of the jobs activated by the job scheduler, the larger ones being sub-divided, see Drawing No. 890043.

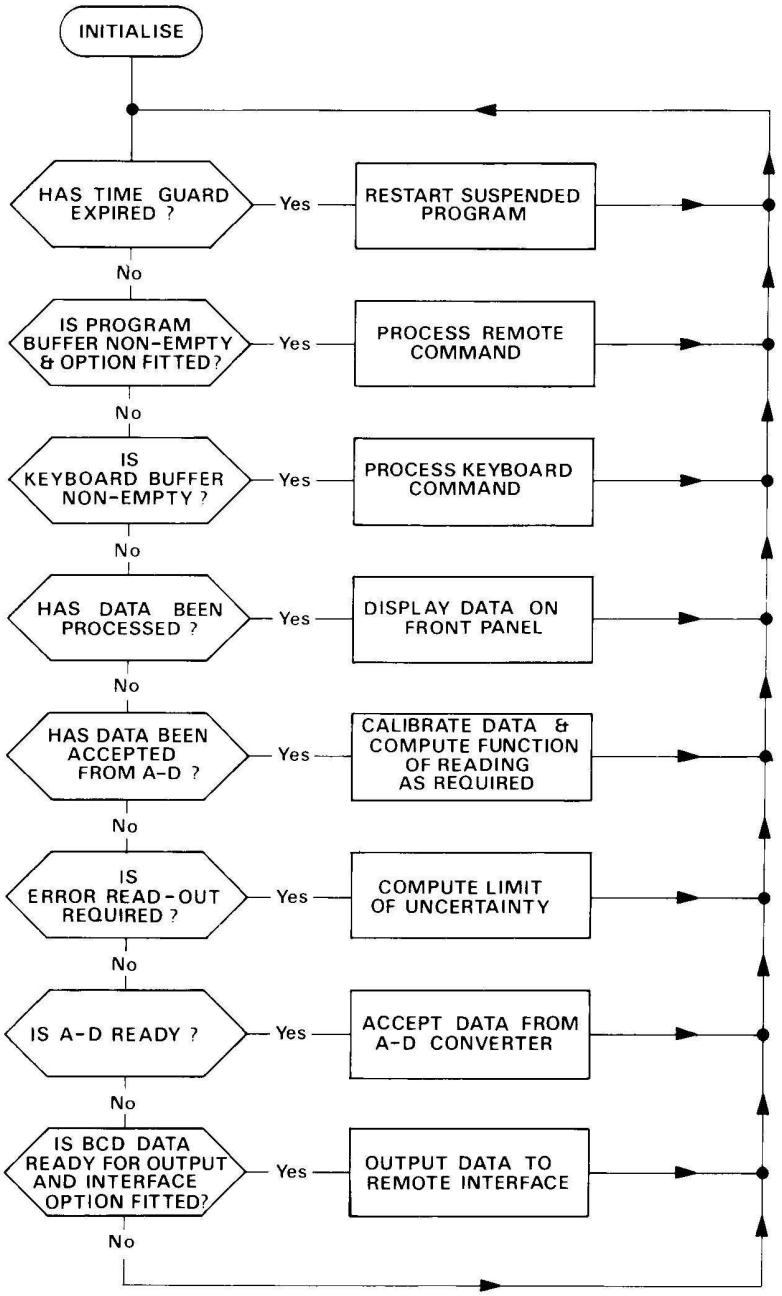

FIG. 3.34 JOB SCHEDULER

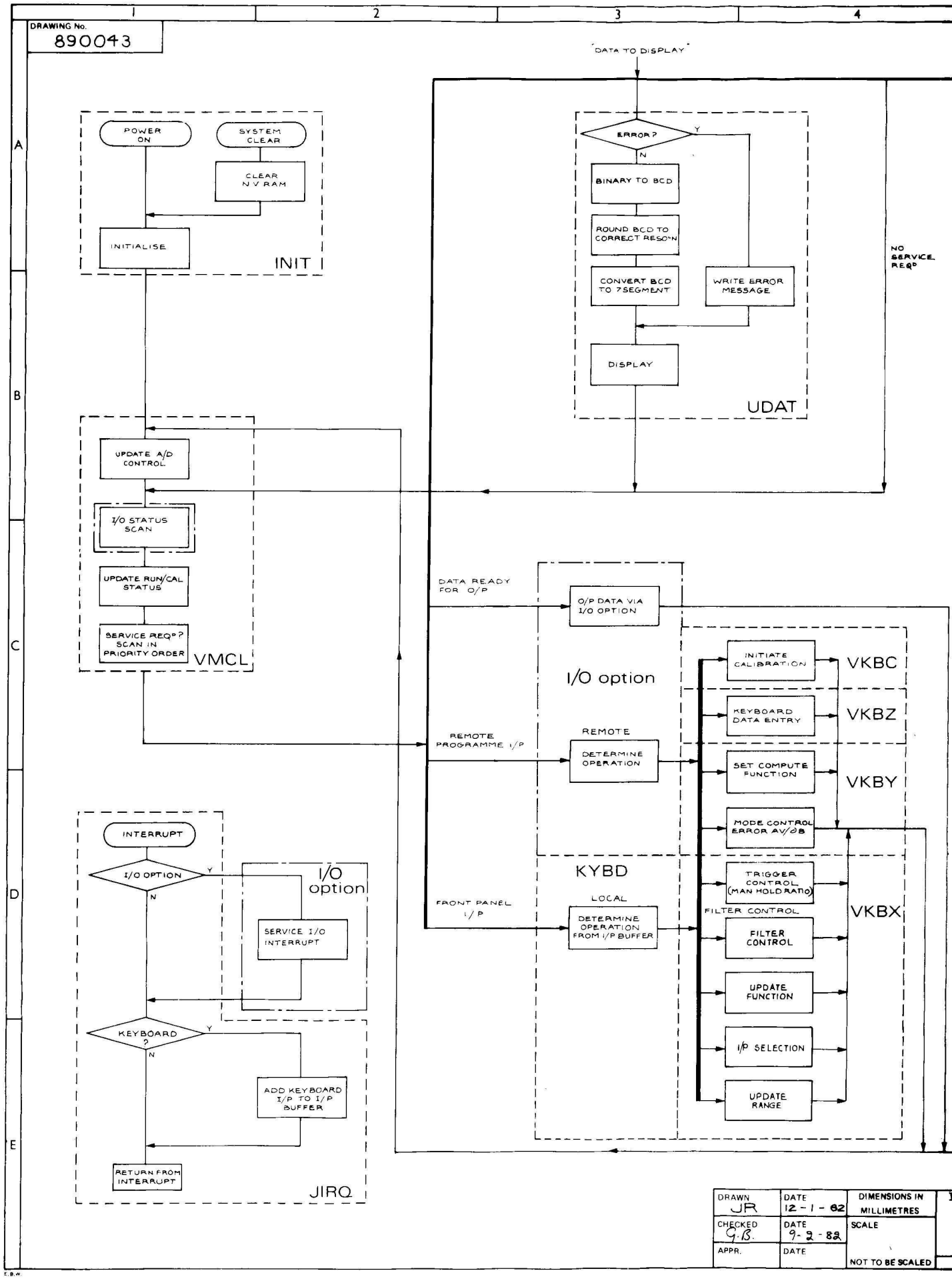
DRAWING No.
890043
1
2
3
4
A
B
C
D
E
"DATA TO DISPLAY"
POWER ON
SYSTEM CLEAR
CLEAR N V RAM
INITIALISE
INIT
ERROR?
Y
N
BINARY TO BCD
ROUND BCD TO CORRECT RESOLN
CONVERT BCD TO 7SEGMENT
WRITE ERROR MESSAGE
DISPLAY
UDAT
NO SERVICE REQD
UPDATE A/D CONTROL
I/O STATUS SCAN
UPDATE RUN/CAL STATUS
SERVICE REQD? SCAN IN PRIORITY ORDER
VMCL
DATA READY FOR O/P
O/P DATA VIA I/O OPTION
I/O option
REMOTE PROGRAMME I/P
REMOTE
DETERMINE OPERATION
FRONT PANEL I/P
LOCAL
DETERMINE OPERATION FROM I/P BUFFER
KYBD
INITIATE CALIBRATION
VKBC
KEYBOARD DATA ENTRY
VKBZ
SET COMPUTE FUNCTION
VKBY
MODE CONTROL ERROR AV/2B
TRIGGER CONTROL (MAN HOLD RATIO)
FILTER CONTROL
VKBX
FILTER CONTROL
UPDATE FUNCTION
I/P SELECTION
UPDATE RANGE
INTERRUPT
I/O OPTION
Y
N
I/O option
SERVICE I/O INTERRUPT
KEYBOARD ?
Y
N
ADD KEYBOARD I/P TO I/P BUFFER
RETURN FROM INTERRUPT
JIRQ
DRAWN JR
DATE 12-1-82
DIMENSIONS IN MILLIMETRES
CHECKED G.B.
DATE 9-2-82
SCALE
APPR.
DATE
NOT TO BE SCALED
E.B.W.

ISS	CHANGES
12	ECO 1267 6½ DIGIT MOD AND GENERAL UPDATE JR 9.2.82

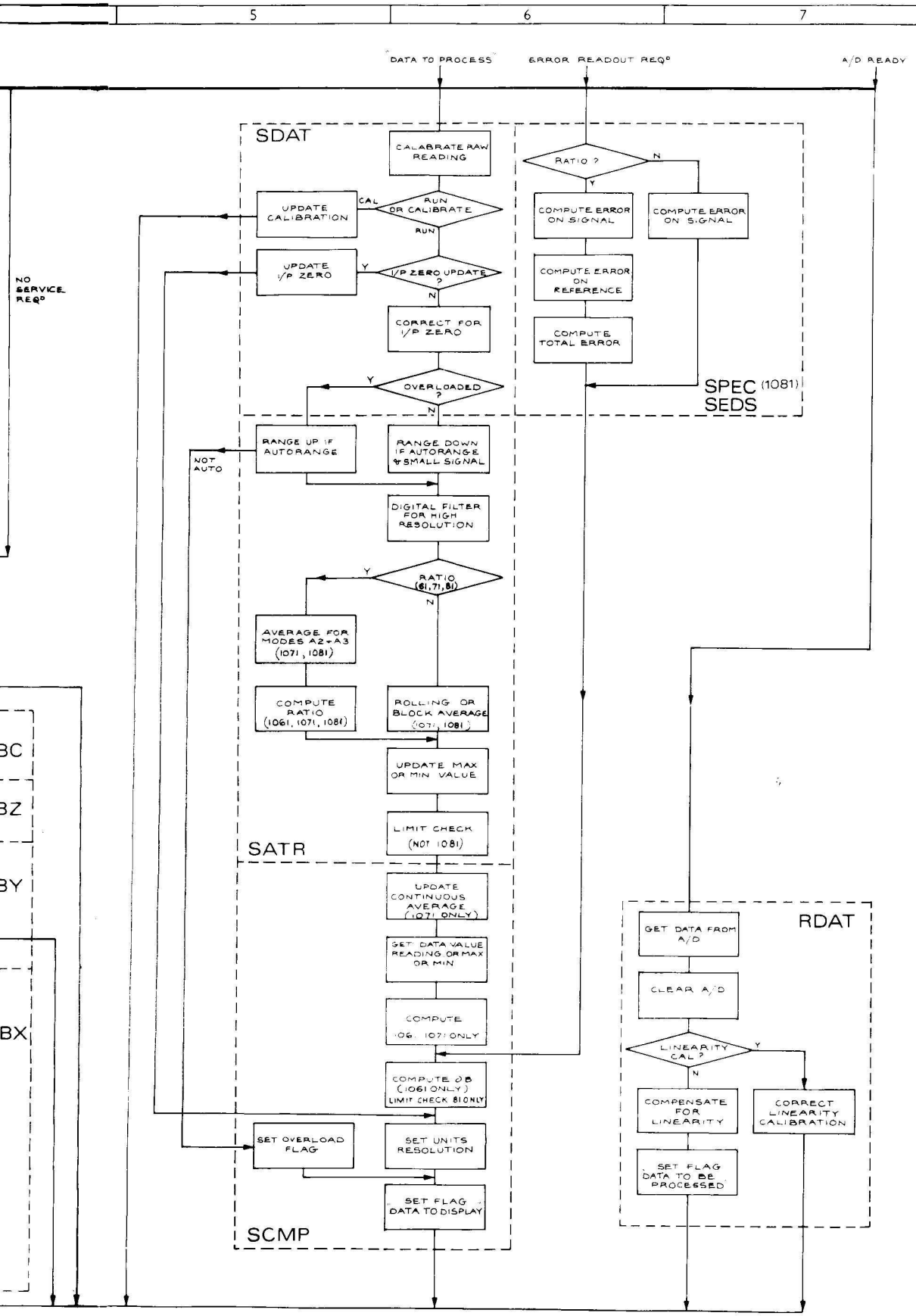

datron
ELECTRONICS
LIMITED
NORWICH

ENSIONS IN LIMETRES	TOLERANCES DECIMAL TO 2 PLACES ± 1mm; DECIMAL TO 1 PLACE ± 2mm; WHOLE DIMENSIONS ± 4mm; ANGULAR ± ½°	MATERIAL ——	ASSY DRG & I	TITLE MASTER PROGRAM SOURCE	DRAWING No. 890043
O BE SCALED	UNLESS OTHERWISE STATED FIRST ANGLE PROJECTION	FINISH ——	PARTS LIST I; CIRCUIT DIAGRAM; CHECK PROCEDURE; CHECK LIST		SHEET 1 OF 27

Data Control. Data handled by the system consists of a stream of measurement information on which a number of operations are carried out. A second stream, asynchronous with the first, consists of commands derived from the front panel or digital interface, controlling both the measurement circuits and computation programs. Operations on the measurement stream basically consist of acquiring the raw data from the A-D converter, calibrating this data and carrying out any other computations, and converting and formatting the data for output. Note that a job consuming data is given higher priority than the one producing data for it, allowing a producer to place data into an empty buffer. The consumer is activated by a flag, set by the producer to indicate data ready in the buffer.

Process Control. Control of the instrument by the processor, initiated from the front panel or digital interface, is arranged by using a 'pipeline control' of the major system state and a 'first in/first out' buffer between the interrupt level routine receiving the control command and the main program implementing it. The major system state consists of the range, function, resolution, filter, ratio, autorange, etc., flags and the computation mode (reading, A-B, ÷C, etc.). The pipeline comprises three levels. The top, level 1, reflects the state being programmed, the second, level 2, the state of the measurement circuits and the third, level 3, the measurement being processed. When a command is input, level 1 is updated (e.g. a new range is selected) and as soon as the measuring circuits are not converting an input signal, the state in level 1 is moved to level 2 causing the measurement circuits to update to the new state. When an A-D conversion is complete, data is read from the A-D and the state transferred from level 2 to 3, providing information for the processing routines. Additionally, at this time, the level 1 to level 2 transfer is repeated and the measurement circuits again updated to allow for commands received while the conversion is in progress.

A second control mechanism used is to input all the commands via a 'first in/first out' buffer between the interrupt level routine receiving the command and the main program implementing it. Thus the processor under remote control is able to 'simultaneously' set up the requirements for the next reading, convert the current reading and process the last one.

3.8.1.2 The Two-Phase Clock

The 6800 requires a non-overlapping positive two-phase (Ø1, Ø2) clock. This is derived from the line-locked master clock signal (1.6MHz for 50Hz line, 1.9MHz for 60Hz – see sheet 4). The first half of M57 divides the master clock by two to 800kHz, producing antiphase squarewaves at pins 14 and 15. If data is not being transferred via the CMOS data bus; M57 (CMOS I/O) is at logic 0, M57-11 is at logic 1, so M56-8 follows M57-15. The circuit utilizes the propagation delays inherent in M54 and M55 (approx. 10ns per gate), to ensure that the positive-going segments of Phase 1 and Phase 2 clock waveforms do not overlap (as illustrated in Fig. 3-35). Q6 and Q7 drive the clock output at voltage levels demanded by the processor (0V and +5V).

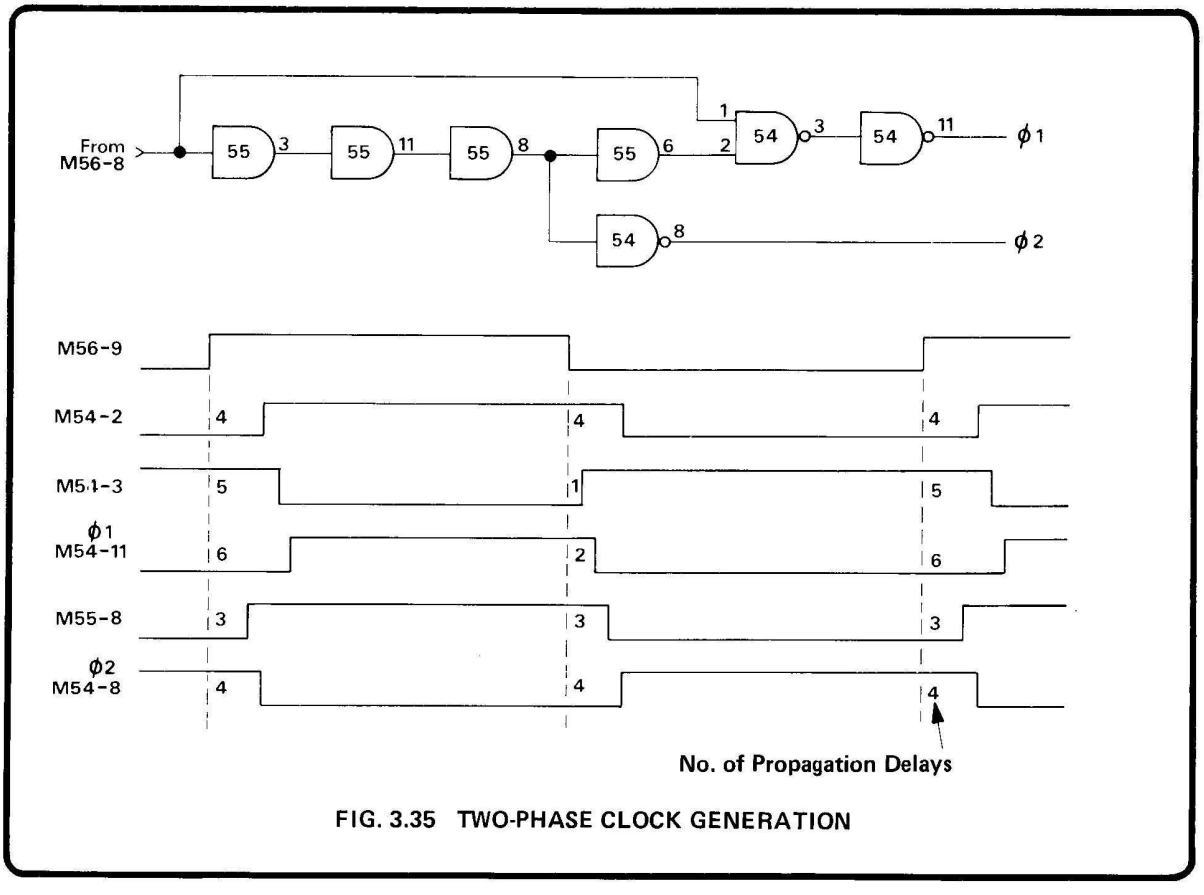

FIG. 3.35 TWO-PHASE CLOCK GENERATION

To account for slower data transfer in CMOS devices, the clock frequency is again divided by two to 400kHz when the CMOS data bus is active. The decoded address 'CMOS I/O' at M57-7 is set to logic 1 during these transfers, so a 400kHz square wave appears at M57-11. The combined effect of this and the 800kHz output from M57-15 is to 'stretch' the waveforms of the Phase 1 and 2 clock outputs (illustrated in Fig. 3.36). Thus Phase 2 remains at logic 1 for 1½ cycles of the normal 800kHz operation, allowing more time for CMOS transfers.

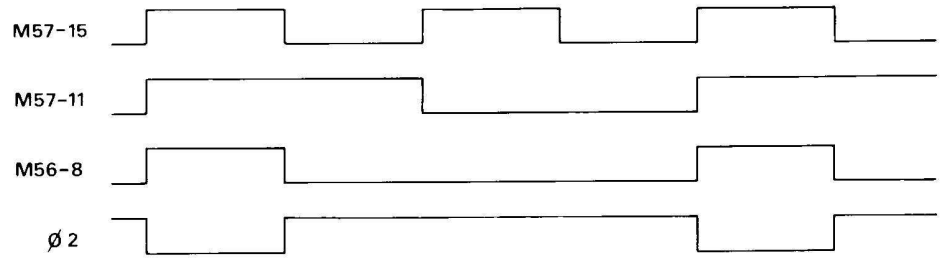

FIG. 3.36 TIMING DIAGRAM OF STRETCHED TWO-PHASE CLOCK

3.8.1.3 RAM/ROM Circuit

The 6800 uses 3 Read-Only Memory chips (ROMs) which contain the program necessary to run the instrument. Each ROM is able to store up to 4096, 8-bit 'bytes' of program information; grouped in program modules. The MPU accesses a byte by placing its address on the 16-bit Address Bus and driving the Valid Memory Address (VMA) line true (logic-1). The information held in that particular location is then sent back to the MPU via the Processor Data Bus.

The chip-select inputs for the RAM and ROM are decoded from a selection of high-order address bits. This selection determines the positions of the RAM and ROM in the memory map. For example: M30 is fed from A15.A13.A12 so that it covers the memory locations from #F000 to #FFFF (Note that since A14 is not decoded M30 also appears at #B000 to #BFFF).

The processor employs 1024 bytes of 8-bit wide Random Access Memory (RAM) made up from two 1024 x 4-bit RAMs (M31/M36). M31 and M36 are employed as operating memory for scratch pad operations and storing volatile data (e.g. Max, Min). The principal location of the RAM is from #0000 to #00FF. Since A8 and A9 are not decoded there are images starting at #0100, #0200, #0300.

A further 256 bytes of 8-bit wide RAM are made up from two 256 x 4-bit RAMs (M19/M20). M19 and M20 are backed up by a battery to privide the non-volatile 'Calibration' and 'Zero' memory. Three address bits A12, A14 and $\overline{A15}$ are decoded by M33 (pin 8) to enable M19/M20, but M29 (pin 6) permits the memory contents to be changed only if CAL is selected, or if the ZERO section of the memory is addressed (A7 and A6 both at logic-1).

The read/$\overline{write}$ control line R/$\overline{W}$ from the 6800 is gated with a 'Master Clock ÷ 2' signal to provide correct timing, and the address decodes include gating with VMAØ2.

An instrument power up is detected by M60/M62 causing an initialization $\overline{RESET}$ signal to be fed to the MPU via Q16. (See Fig. 3.38).

During a power-up or power-down (+5V supply line $<$+4.75V) a signal from the supply-level detectors prevents RAMs M19 and M20 from being overwritten by holding the CS (chip select) lines low ($<$0.2 volts) via Q14 for a period of approx. 25mS determined by R55/C32.

3.8.2 CMOS Address Decode and Input/Output Circuits (430329 sheet 2)

Information is transferred to and from CMOS devices via the CMOS Data Bus during periods when the signal CMOS $\overline{I/O}$ is at logic-1 (M33-6). CMOS I/O is addressed when $\overline{A15}$.A14.A11 is true. This occurs when memory locations starting at #4100 (and its images) are selected. The transfer of data between the Processor Data Bus and the CMOS Data Bus takes place at 400kHz, the Read/Write lines selecting the direction of the information through the tri-state buffers M4, M5 and M6.

In order to address the various CMOS input/output devices, the address lines must be further decoded. M32 is a 1-of-10 decoder, providing 5 addressable drives; M16 is a dual 1-of-4 decoder addressing the front panel circuitry and the digital elements of the A-D converter. A summary of the decoded CMOS address signals is given in Fig. 3.39.

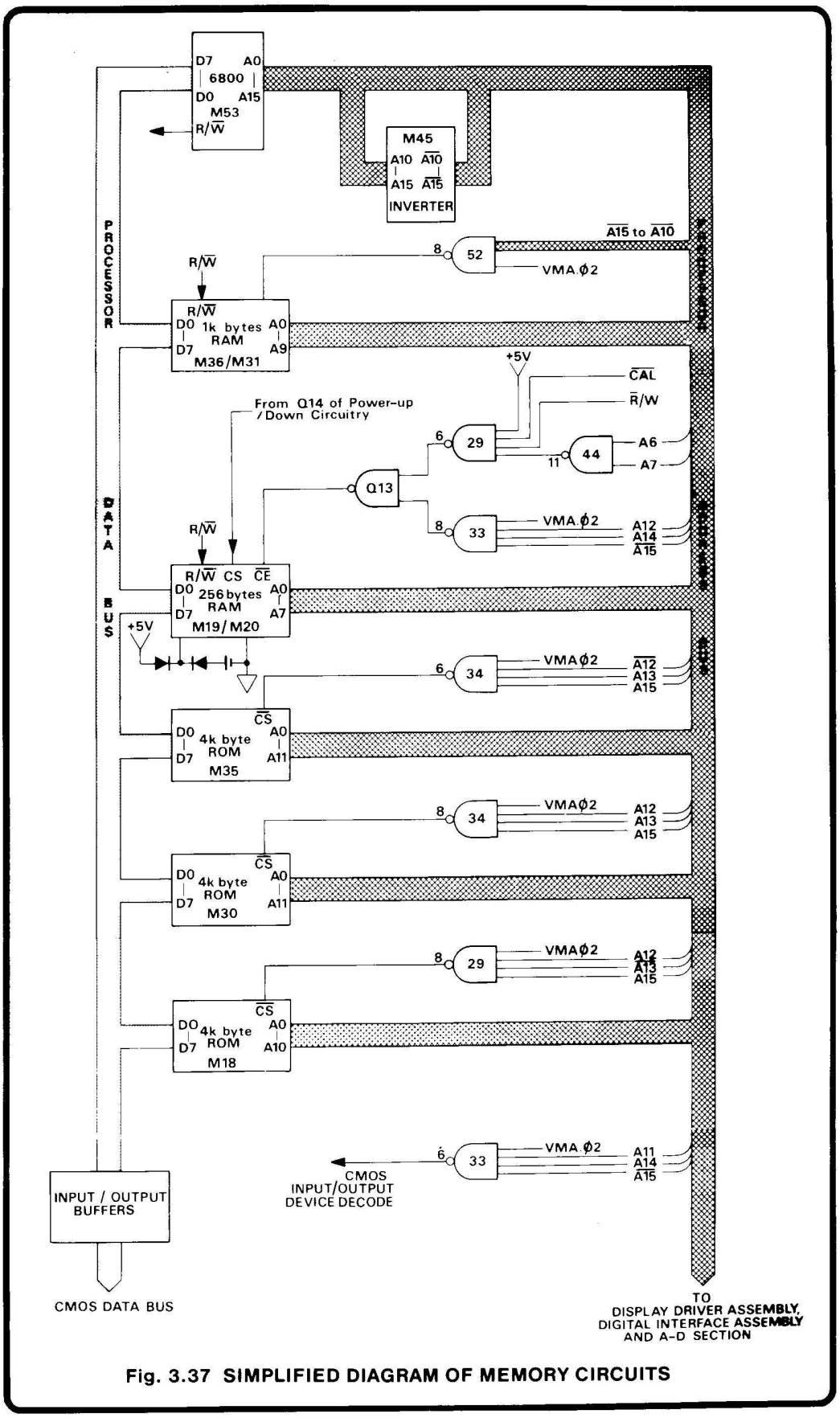

Fig. 3.37 SIMPLIFIED DIAGRAM OF MEMORY CIRCUITS

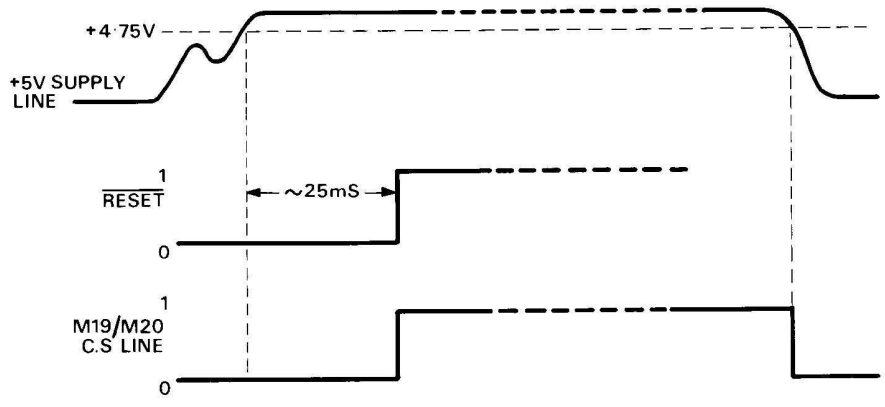

FIG. 3.38 START UP AND NON-VOLATILE RAM PROTECTION

A6	A5	A4	A2	A1	A0	SIGNAL	M32/M16 Pin No.	Operation
0	0	0	1	X	X	$\overline{\text{XKYBRD}}$	M32-2	Keyboard read/write
0	0	1	X	X	X		(M32-4)	Forces a MPU 'power up' sequence
1	0	0	X	X	X		(M32-11)	Triggers processor time guard (M43)
0	1	0	1	X	X	$\overline{\text{XADDT}}$	M32-6	A-D main counter output enable
0	1	1	X	X	X		(M32-9)	Analog interface address latch input enable
0	0	0	X	0	0	$\overline{\text{XKDSP0}}$	M16-7	} Addresses keyboard l.e.d. latches
0	0	0	X	0	1	$\overline{\text{XKDSP1}}$	M16-6	
0	0	0	X	1	0	$\overline{\text{XKDSP2}}$	M16-5	
0	0	0	X	1	1	$\overline{\text{XKDSP3}}$	M16-4	
0	1	0	X	0	0	$\overline{\text{XADSTA}}$	M16-9	A-D, and interrupt status output enable
0	1	0	X	0	1		M16-10	CAL INTERVAL switch output enable
0	1	0	X	1	0	$\overline{\text{XADCTL}}$	M16-11	A-D control latches, input enable
0	1	0	X	1	1	$\overline{\text{XADDLY}}$	M16-12	A-D delay counter input enable

FIG. 3.39 CMOS ADDRESS DECODING

3.8.3 Analog to Digital Conversion (Digital Section)

3.8.3.1 General Principle

Block diagram Fig. 3.40 outlines the essentials of the digital section and should be used with flowchart Fig. 3.41 in order to follow the operation of this section.

The function of this section of the circuitry is to generate the sequence that when transferred to the analog section, controls the sequence from RESET through the integration cycle and back to RESET. The circuitry controls the length of SIG and BIAS and counts during REF 1 and REF 2, the accumulated count being proportional to the length of the reference periods, which in turn is proportional to the measured input signal. At the end of each reading cycle the count is read by the MPU, processed and displayed.

The sequence is controlled by stepping M47 through Q0 to Q7. Each 'Q' output from M47 goes to logic-1 to activate its stage of the sequence; completion of one stage generates the 'Enable' for the next, via M46 switches, as a logic-0 state at M47-13. Timing is synchronized by Master-Clock/2 positive-going edges at M47-14, when M47 is enabled.

3.8.3.2 Preset Procedure

As part of the initialisation routine (at switch on), M47 (used as the sequence controller), is reset from M37-11, causing M47-2 to be logic '1'. Thus the control lines $\overline{A}$, $\overline{B}$ and $\overline{C}$ put the analog section of the A-D into RESET (See Fig. 3.42). The Address Bus decoded signal XADDLY is taken low, enabling the presetting of the delay counters M13 and M14 from the CMOS Data Bus, the amount of delay being determined by the selected range, function and filter state, see Fig. 3.43. The A-D control latches, M11 and M12 are then enabled by XADCTL to (i) reset the command latch M1 (from M11-4), (ii) set the resolution of the main counter (M11-5 and 6), (iii) select trigger gate (M12-3, 4 or 5) and (iv) reset the data ready latch (M12-6).

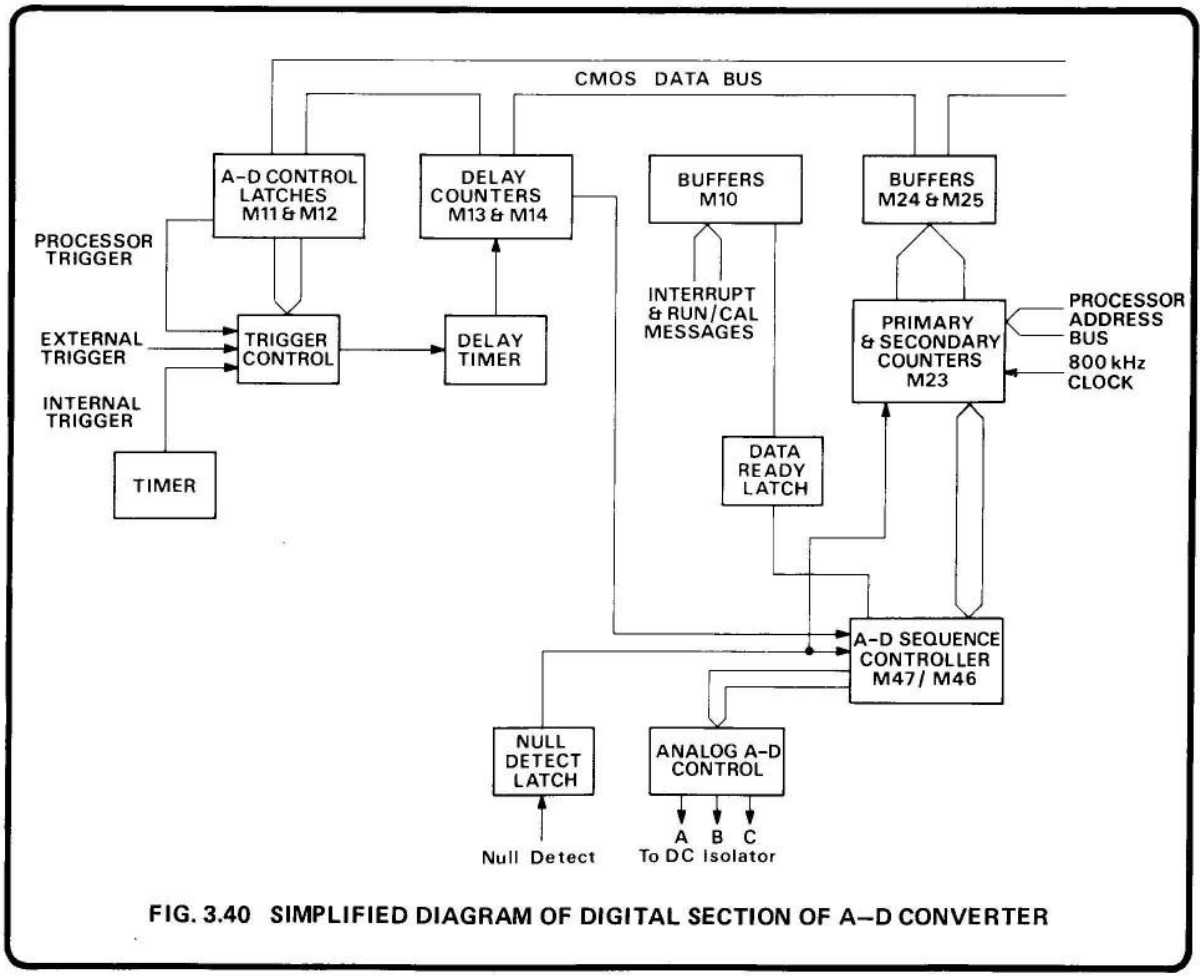

FIG. 3.40 SIMPLIFIED DIAGRAM OF DIGITAL SECTION OF A–D CONVERTER

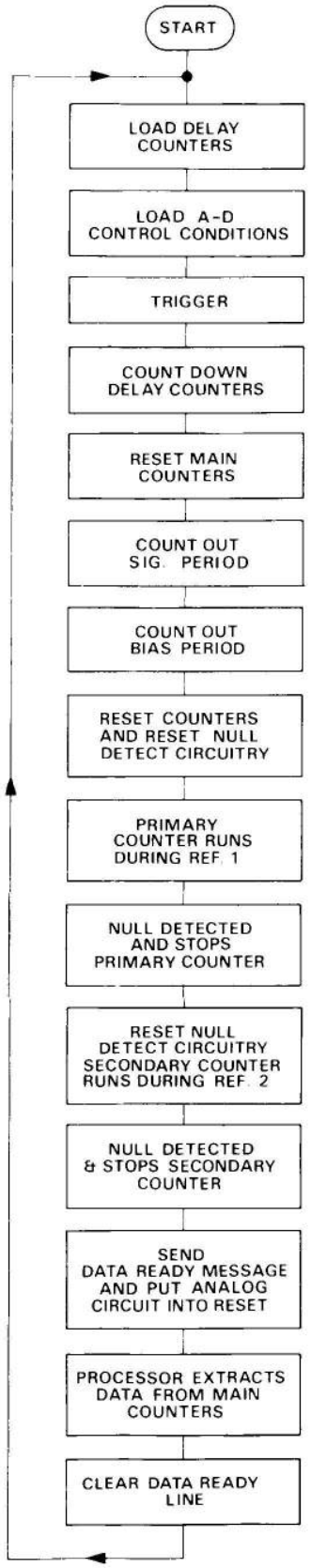

FIG. 3.41 FLOWCHART OF A–D DIGITAL SECTION

SIGNAL	$\overline{A}$	$\overline{B}$	C
RESET	1	1	0
SYNC	1	1	0
SIG	1	1	1
BIAS	0	1	1
WAIT	0	1	1
REF 1	1	0	1
REF 2	0	0	1
END	1	1	1

FIG. 3.42 A-D ANALOG SEQUENCE CONTROL SIGNALS

1061/A SELECTIONS		M13/M14 COUNT	
FUNCTION	RANGE	$\overline{\text{FILTER}}$	FILTER
DCV	All Ranges	2	101
Option 12 ACV DCV + ACV	All Ranges	61	251
Option 10 ACV DCV + ACV ACI DCI + ACI	All Ranges	46	151
DCI	100μA-1mA 10mA 100mA 1A	2 3 5 6	101
kOhms	10Ω-100kΩ 1MΩ 10MΩ	2 4 31	101 121 251

FIG. 3.43 COMMAND DELAYS

3.8.3.3 A-D Measurement Sequence

Trigger. The trigger, required to initiate the measurement sequence, is generated from one of three possible sources:

1. Internally generated 3/second trigger, from timer M61-7.

2. Externally generated trigger, from EXT TRIG on rear panel via M24-13.

3. A MPU derived trigger from M11-3 generated when auto-ranging, pressing MANUAL when HOLD selected, during calibration, an INPUT ZERO sequence or via the digital interface.

The trigger source is selected by the latched data on M12, enabling one of the three gates of M2.

Delay. The trigger pulse clocks the 'command latch' M1-11 causing the timer, M15, to output clock pulses (200Hz) to the delay counters (M13 and M14) after a delay of approx. 1.5mS set by C5, R8, R9, R11. The delay counters proceed to count down to zero, at which time the delay latch (M26) is clocked. Thus M26-14 becomes a logic '0', enabling the sequencer M47 (an octal counter) to proceed on to the next step via M46-2.

SYNC. The SYNC phase from the sequencer resets the counters of M23 and places the analog section of the A-D into SIG. The pulse is fed back to M47 via M46-3 to step on the sequencer.

SIG. During the time that the SIG line is at logic-1 (M47-3), the primary counter in M23 is enabled and counts out the signal period (20ms in normal mode, or 2.5ms superfast). When the counter times out, M23-23 goes to logic-0, enabling M47-13 via M23-14. The next Master-Clock/2 at M47-14 steps the sequence on to BIAS (M47-7 to logic-1, M47-3 reverts to logic-0).

BIAS. The BIAS signal (M47-7) is transferred to the analog section of the A-D by changing the state of the $\overline{A}$ line (M38-9 to a logic '0'). BIAS also enables the secondary counter of M23 to count out the BIAS period (20μS). The signal indicating the end of this period is passed via M46-9 causing the sequencer to carry on to the next step. The BIAS signal also resets the 'delay latch' (M26) ready for the next measurement cycle, and the 'null detector' latch (M22A).

WAIT. The WAIT pulse resets the counter of M23 via M39-10, keeps the $\overline{A}$ line to the analog section low, clocks the polarity null detect latch M22(B) causing a logic '1' on pin 1 if the signal applied to the analog section of the A-D converter was positive (logic '0' if negative) and is fed back to enable the sequencer via M46-3.

REF 1. The high to low edge of WAIT causes the $\overline{A}$ to change state and going into REF 1 makes $\overline{B}$ a logic '0'. The analog side is then in the condition to start 'ramping down'. While REF 1 is high the primary counter of M23 is enabled (pin 3) and counts the period of REF 1.

REF 1 is ended when a null detector pulse is detected and latched on to M22. This causes the sequencer to step on once more from M46-3, the low to high edge from pin 4 disabling the primary counter.

REF 2. The REF 2 signal changes the state of the $\overline{A}$ line (causing the analog section to ramp down at a slower rate), resets the 'null detect' latch and enables the secondary counter of M23 (Pin 13) to count the period of REF 2. If the secondary counter overflows, the primary counter is incremented from M23-16.

As in REF 1, a null detector pulse causes the counting period to end (M22-12) and increments the sequencer via M46-3 causing the $\overline{A}$ and $\overline{B}$ lines to change state.

END. The low to high edge from M47-10 is fed back to M47, via M48-6 giving a master reset. Thus the sequencer is placed into RESET.

RESET. The sequence pulse from M47-2 clocks the 'data ready' latch M1-3 placing a signal on to the CMOS Data Bus via tri-state buffer M10 indicating to the MPU that a reading is ready to be taken from the main counter M23. Data is extracted from the counters in three bytes (controlled by the A1 and A0 lines of the processor address bus) with the counter output buffers, M24 and M25 being enabled by $\overline{XADDT}$, a decoded processor address.

The RESET signal is also passed to the analog section of the A-D by changing the state of the C line.

Once the data has been extracted from the main counter the set-up procedure is then repeated to await a further trigger.

3.8.3.4 Master Clock and Line Locking (430329 sheet 4)

To give improved rejection of line frequency related noise, the 1061 is linelocked. The line frequency is sampled and compared to the internal master clock. Synchronisation is achieved by adjusting the master clock frequency.

A sinusoidal line frequency signal from the 5V mains tap is converted to a square-wave (M25-13) and ÷2(M26-1) before being fed to the comparator section of the ULA M23 (sheet 3). The MASTER CLOCK ÷2 signal is fed to ripple counter M27 which outputs a signal of twice the estimated line frequency, for line related periods, controlled by the ULA (M23-18). This signal is fed to M23-19 (via inverter M39) and after a further ÷2, is compared with the actual line frequency (see Fig 3.44).

The ULA determines whether the master clock is running too slow or too fast, producing a signal on pin 20 whose pulse-width is proportional to the difference. The output of pin 21 is a 25Hz square-wave which is fed to the up/down input of counters M41/50. Thus depending on the position and down period of the pulse, the count held is increased or decreased.

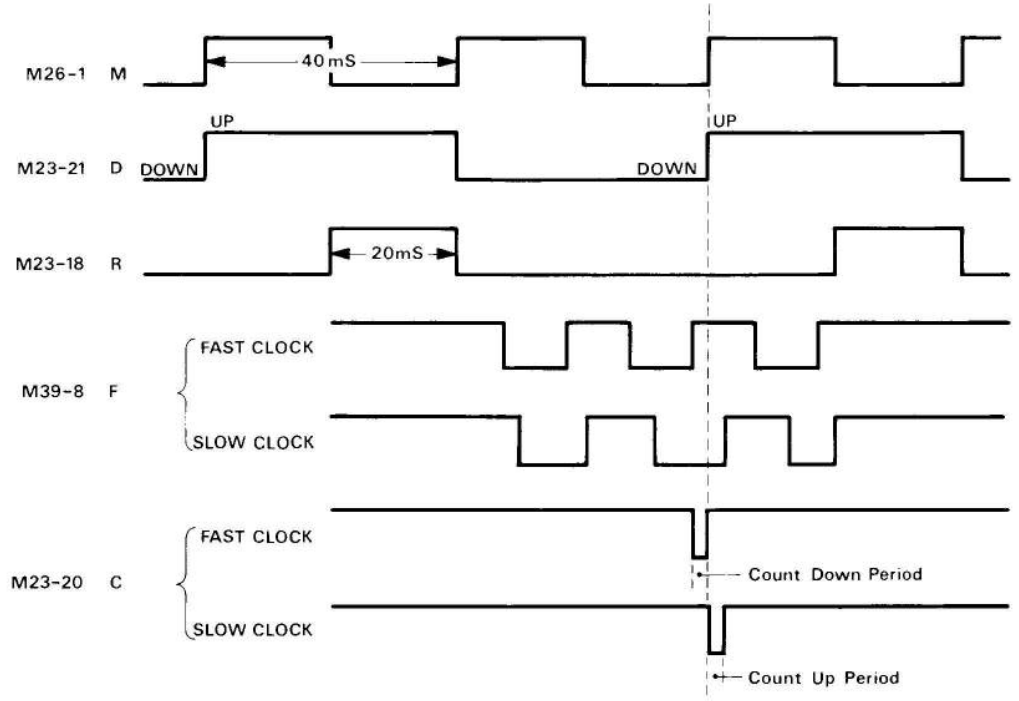

FIG. 3.44 LINE LOCKING TIMING DIAGRAM (50Hz)

Latches M42/51 are updated with this new count during the A-D RESET period and applies the count to resistor network AN4 which forms a D-A converter. Changing the voltage applied to varicap D9 alters its capacitance, thus adjusting the LC of the Colpitts oscillator. Therefore the frequency of the Master Clock is increased or decreased to be an exact multiple of the mains frequency.

3.9 FRONT PCB ASSEMBLY (Circuit Drawing No. 430294)

The Front pcb assembly accepts the measurement signals, digitally displays the value, provides manual control of the measurement circuits and data conditioning, and gives a visual status indication of the selectable instrument states.

3.9.1 Analog Input Signals (430294 sheet 2)

The Front pcb connects the terminals to the 2/4-wire Ohms and Local-Remote Guard switches. Thus in '2-wire': Hi is connected to I+, and Lo to I−, through thermistors R1 and R2. In 'Local': Guard is not directly linked to the front panel Lo terminal, as this becomes active in 4-wire Ohms. Instead, 'Local' links Guard to Ohms Guard, which is permanently connected to DC Isolator Lo.

Signals applied to the six front panel terminals are routed through to the Rear pcb (to the Rear Input/Ratio pcb or Rear Input pcb if Option 40 or 41 is fitted) via the Signal Cable assembly. Each of the terminal leads passes through its own HF choke, all six inductors being wound in the same direction on the same core. This 'Common Mode' choke presents high impedance to transient common mode currents, but low impedance to normal mode differential input currents.

Two screened cables are used to transfer the signals to the rear: I+ and Hi are carried in one; I−, Lo and Ohms Guard in the other. Guard is carried via the cable screens, thus guarding the signals during transfer.

3.9.2 Display Signals (430294 sheet 1)

The front panel assembly routes the display signals from the Display Driver board to the gas discharge display.

3.9.3 Keyboard Data Encode (430294 sheet 1)

Selection of a front panel keyswitch causes one of the two 16-key encoders (M7 or M10) to send a data available message to M2 (a data latch) and to remember which key was pressed. The output of M2, (pin 1 or 13) signals the interrupt circuitry of the Digital Board (IRQK1 or IRQK2).

When the microprocessor accepts the interrupt and has located the source, the XKY BRD line to pin 13 of M7 and M10 is taken low, enabling the data outputs of the encoders to be placed on to the CMOS data bus (See Fig. 3.45 for the key select coding). This signal also resets M2 ready for the next key selection.

KEY	M7			
	14	15	16	17
	CD7	CD6	CD5	CD4
100	0	0	0	0
10	0	0	0	1
1000	0	0	1	0
10MΩ	0	0	1	1
1	0	1	0	0
.1	0	1	0	1
10Ω	0	1	1	0
AUTO	0	1	1	1
DC	1	0	0	0
kΩ	1	0	0	1
KEYBOARD	1	1	0	1
I	1	1	1	0
INPUT ZERO	1	1	1	1

KEY	M10			
	14	15	16	17
	CD3	CD2	CD1	CD0
HOLD	0	0	0	0
RATIO	0	0	0	1
TEST	0	0	1	0
SPEC	0	0	1	1
(A–B)	0	1	0	0
dB	0	1	0	1
÷ C	0	1	1	0
MAX	0	1	1	1
MIN	1	0	0	0
RESET	1	0	0	1
MAN	1	0	1	0
INPUT FILTER	1	1	0	1
AC	1	1	1	1

FIG. 3.45 CMOS DATA BUS : KEY SELECT CODING

3.9.4 Keyboard L.E.D. Data Decode (430294 sheet 1)

The XKY BRD signal is inverted by Q1, R7, C1, R6 partially enabling the L.E.D. data latches M4, M5, M6, M8, M9, M11 and M12 while information is not being extracted from the keyboard encoders. The data latches are divided into four sets, M6 and M4, M8 and M5, M12 and M11, M9 being fully enabled from the XKD SPØ – XKD SP3 lines respectively.

On initialisation or after a change of the instrument's selectable states, the L.E.D. data latches are updated by placing data on the CMOS Data Bus (See Fig. 3.46), firstly to M8 and M5 (enabled from XKD SP1) and 'clocking' from the CMOS CLK line (J2-6), secondly to M12 and M11, then M9 and finally M6 and M4.

The output of the L.E.D. latches provide the signals to the bases of the L.E.D. drive transistors, switching them on or off as required.

CMOS DATA LINE	M12/M11	M8/M5	M6/M4	M9
CDO	÷C	DC	AUTO	
CD1	dB	kΩ	10Ω	
CD2	SPEC	INPUT ZERO	.1	
CD3	TEST	INPUT FILTER	1	
CD4	A–B	KEYBOARD	10	
CD5	MIN		100	MAN
CD6	MAX	I	1000	RATIO
CD7	RESET	AC	10MΩ	HOLD

FIG. 3.46 CMOS DATA BUS : LED-SELECT CODING

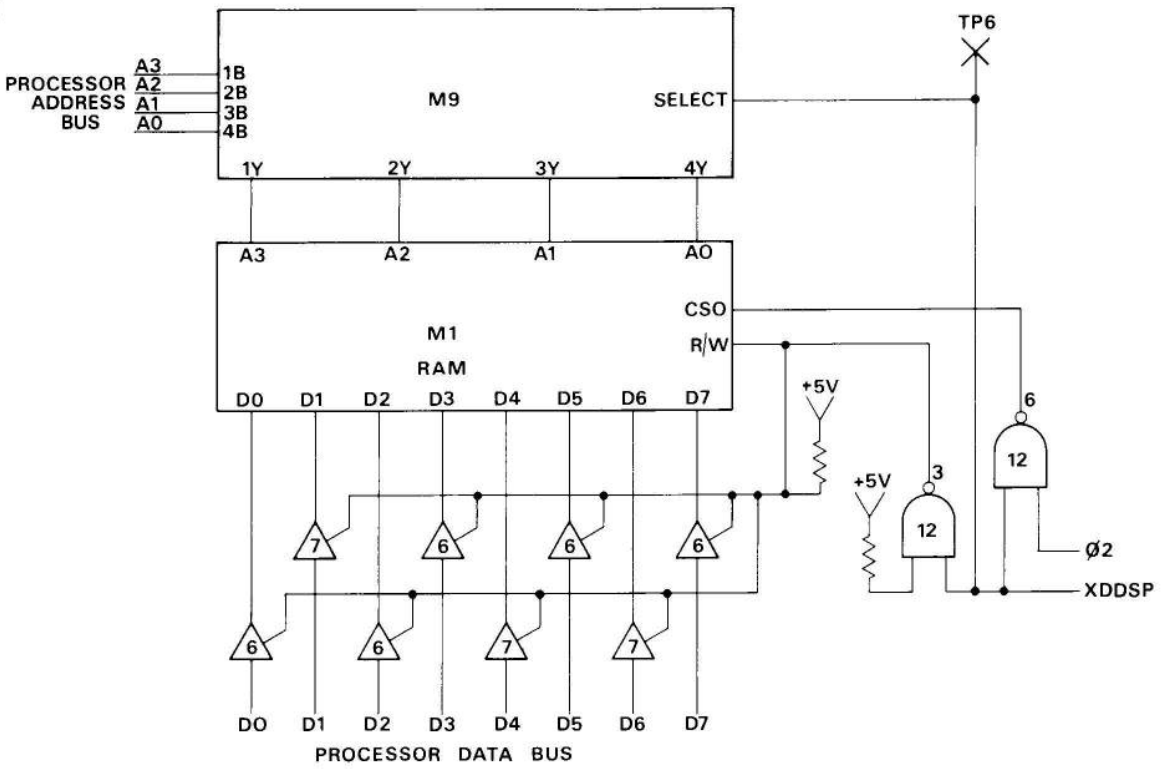

FIG. 3.47 DISPLAY DRIVER WRITE CIRCUITRY

COUNTER (M8)				RAM (M1)				Display block energised or operation implemented from M11
Q_3	Q_2	Q_1	Q_0	A_3	A_2	A_1	A_0	
0	0	0	0	0	0	0	0	1
0	0	0	1	0	0	1	0	3
0	0	1	0	0	1	0	0	5
0	0	1	1	0	1	1	0	7
0	1	0	0	1	0	0	0	9
0	1	0	1	1	0	1	0	11
0	1	1	0	1	1	0	0	
0	1	1	1	1	1	1	0	
1	0	0	0	0	0	0	1	2
1	0	0	1	0	0	1	1	4
1	0	1	0	0	1	0	1	6
1	0	1	1	0	1	1	1	8
1	1	0	0	1	0	0	1	10
1	1	0	1	1	0	1	1	Reset Counter

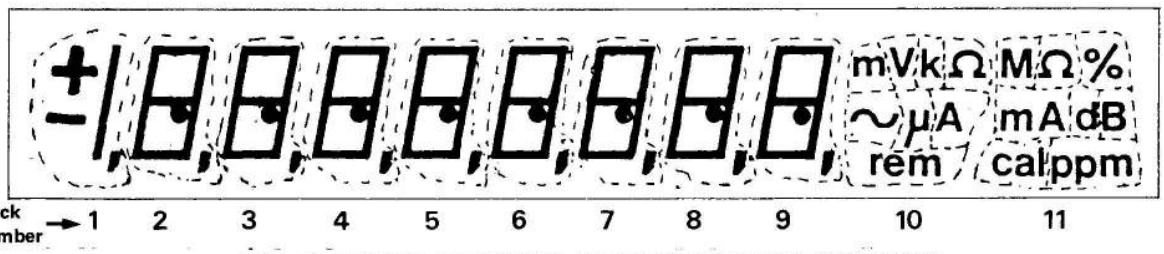

FIG. 3.48 DISPLAY DRIVER READ MODE ADDRESS STATES

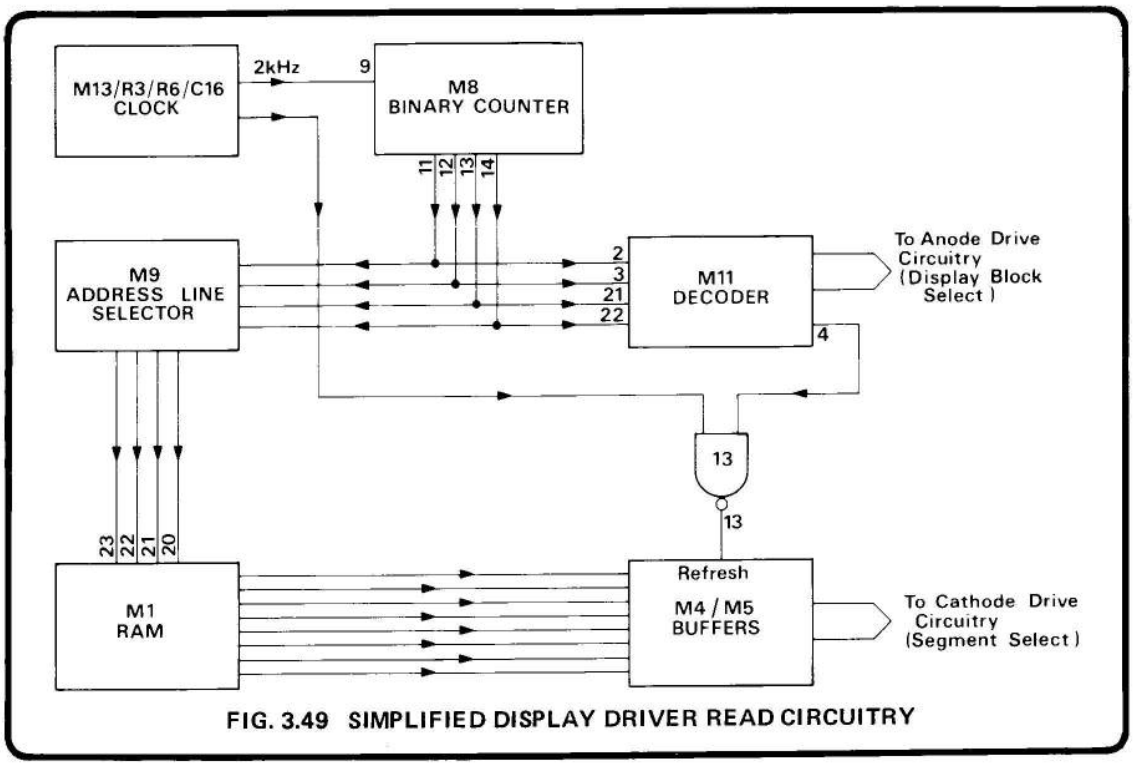

FIG. 3.49 SIMPLIFIED DISPLAY DRIVER READ CIRCUITRY

3.10 DISPLAY DRIVER ASSEMBLY (Circuit Drawing No. 430330).

Basically, the Display Driver assembly receives the display information from the microprocessor (running at 800kHz) and stores it in a Random Access Memory (RAM) digit by digit. This data is then read out at a slower frequency (2kHz), level shifted and output to the gas discharge display.

NOTE: In the following description, each bar, decimal point or legend is referred to as a display segment and each set of segments i.e. ±1, ⊟ or a legend block, is referred to as a display block.

3.10.1 Write Mode

On completion of a reading or when certain modes are selected, (e.g. ERROR, keyboard entry), the processor indicates to the Display Driver Board that data is ready to be transferred by the signal XDDSP (TP6). This causes the RAM (M1) to be placed into its write mode and the quadruple 2-line to 1-line data selector, M9, to select the 'B' inputs which are connected to the processor address bus.

The signal XDDSP also causes the tri-state buffers M6 and M7 to become enabled, causing the data input lines of the RAM to be connected to the processor data bus. Thus under MPU control, the display data (±1, ⊟ 's, decimal points and legends) is written into the RAM.

Once this transfer of data is complete the RAM becomes deselected, the buffers return to their third state inhibiting the data bus to the RAM and connects the 'A' inputs of M9 to the address lines of the RAM.

3.10.2 Read Mode

Discharge between adjacent display blocks is prevented by time multiplexing and sending information to alternate blocks. A particular display block is selected by driving its anode, and a particular segment by driving the segment cathode.

The free running clock M13, R3, R5, C16, produces a 2kHz signal (M13-9) to drive a 4-bit binary counter, M8, which provides the control of the address lines in the read mode (See Fig. 3.49). The display block selection is achieved by decoding these 4 lines into 16 bits using M11. The output lines of M11 are connected to the bases of transistors Q1-Q3, Q13-Q20 which act as anode switches. Note that when the address lines are in the state 0000 the output of M11 (pin 11) selects the anode to block 1, 0001 selects the anode to block 3 (M11-9), 0010 ... block 5, etc., thus the display blocks are selected alternately.

To select the appropriate segment data from the RAM to match the display block selection the address lines are given a left hand bit rotation, i.e. if the output of M8 is labelled DCBA, (2^3, 2^2, 2^1, 2^0), the address input of M1 would be CBAD. (Fig. 3.48 gives the state of the address lines for each display block). The particular display block segment data is recalled by the RAM, buffered by M4 and M5, level shifted −180 volts by R8-R15, C4-C11 causing Q5-Q12 to drive the cathodes, D1-D10 acting as restoration diodes. Between the transfer of each set of segment data, M13-13 is taken high, causing the outputs of M4 and M5 to be a logic '0'. This produces a refresh period for capacitors C4-C11 to discharge from the −180V supply through the restoration diodes.

3.11 IEEE 488 STANDARD DIGITAL INTERFACE (Circuit Diagram No. 430427)

The IEEE Digital Interface assembly contains the extra memory circuitry required for the execution and decoding of interface functions, and for data input and output transfers. Simplified diagram Fig. 3.50 shows its essential features.

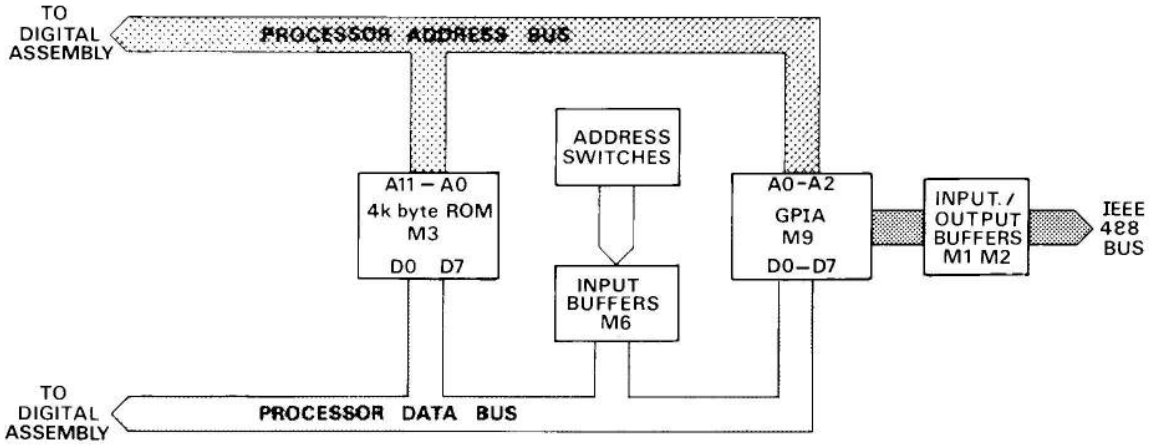

Fig. 3.50 SIMPLIFIED DIAGRAM OF IEEE ASSEMBLY

3.11.1 ROM Circuit

The IEEE Digital Interface assembly acts as an extension to the Digital assembly with connections to both the Processor Address and Data Buses. The board houses 4k bytes of program memory (M3) containing the sub-routines to control the instrument from the IEEE 488 Bus. The ROM receives the address information, with chip selection being made by decoding address lines A3-A11 with XIOBD and master clock Ø2.

3.11.2 Interface Circuit

The General Purpose Interface Adaptor (GPIA). M9, provides the interface between the IEEE 488 Standard Instrument Bus and the 68000 microprocessor. The MPU can receive, process and send messages to the interface through the GPIA.

The GPIA is able to automatically handle the following interface protocal[1] :-

Single address capability
Source and acceptor handshake
Talker and Listener states
Service Request
Parallel Poll
Device Clear
Device Trigger

With MPU it is also capable of:-
Programmable Interrupts
Storing the instrument's address
Control of the interface input/output buffers.

The GPIA is selected by decoding address lines A3-A11 with XIOBD. Address lines A0-A2 with the state of the MPU R/$\overline{W}$ line select one of the 8 read only or 7 write-only registers in the GPIA, enabling the MPU to send or receive data over the interface.

The two signals T/$\overline{R}$1 and T/$\overline{R}$2 are used to control low power transceivers (formed from M1, 2) which drive the interface bus.

[1] For further information refer to 'Getting aboard the 488 Bus' published by Motorola.

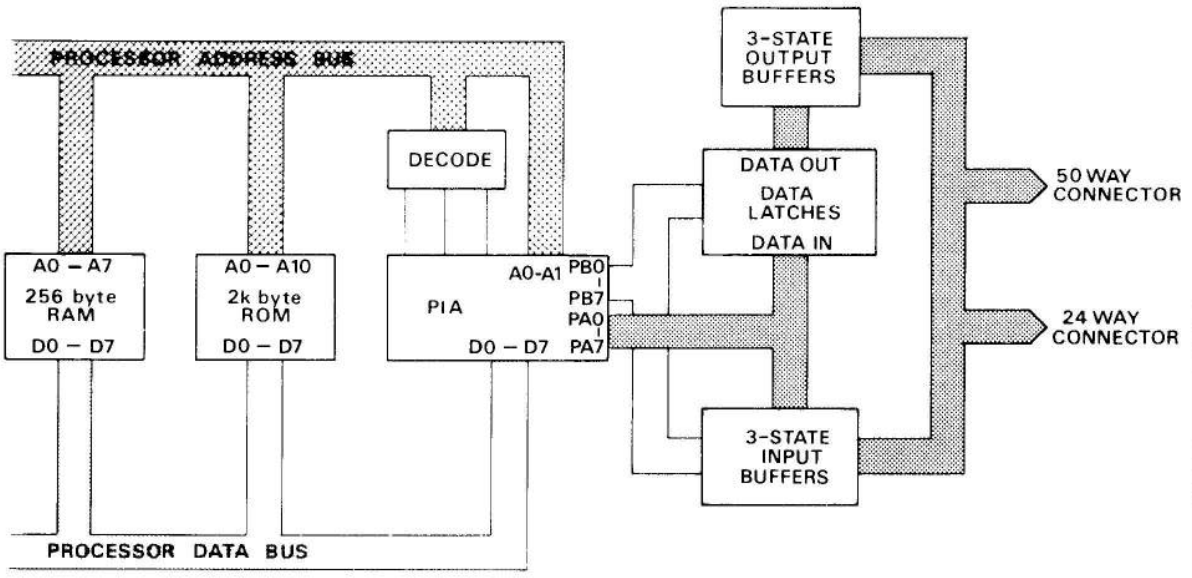

FIG. 3.51 SIMPLIFIED DIAGRAM OF BCD INTERFACE ASSEMBLY

3.12 BCD DIGITAL INTERFACE (Circuit Drawing No 430332)

The BCD Digital Interface assembly contains the extra memory and circuitry required for the execution and decoding of interface functions and to perform data output transfers. Simplified diagram, Fig 3.51 shows the essential features of this board.

3.12.1 RAM/ROM Circuit

The BCD Digital Interface assembly acts as an extension to the Digital assembly with connections to both the Processor Address and Data Buses. The board contains 2k bytes of program memory (M11) containing the sub-routines to control the instrument from the BCD Interface. Extra 'operating (scratch pad) memory' is provided by two 256x4 bit RAMS (M22, M23). Both the ROM and RAM's receive the address information, with chip selection being made by decoding address lines A8-A11 with XIOBD, R/$\overline{W}$ and Ø2.

3.12.2 Interface Circuit

The Peripheral Interface Adapter (PIA), M1, provides the means of interfacing the BCD input/output to the 6800 microprocessor. The PIA is selected by decoding address lines A9-A11 with XIOBD. Address lines A0 and A1 together with MPU data messages configure the six internal registers controlling data flow and external control signals.

Peripheral Data lines PB0-PB7 (M1 pins 10-17) are used as enable lines allowing data to be placed on the BCD Data Bus from the Remote Programming Input and control lines of the BCD Output (2 bytes) and allowing data to be placed into output latches M7-M10, M12-M16 (5 bytes).

The length of PRINT COMMAND is controlled by the timer M2, R1, C3.

3.13 REAR (POWER SUPPLY) PCB ASSEMBLY (Circuit Drawing No. 430295)

3.13.1 General

The line transformer and power supply components are situated at the rear right hand side of the instrument, when viewed from the front. Transformers T1 and T2 are of toroidal construction mounted one on top of the other and bolted to the rear panel. T1 has a split primary comprising two 115V windings, intended for either series or parallel connection depending on the line voltage. An earth screen is interposed between primary and secondary windings to minimise electrostatic coupling, and is grounded to line earth. The second transformer T2 is driven from T1. It also possesses an electrostatic screen, this time being connected to Guard.

3.13.2 180V Supply

The 180V supply is required for the gas discharge display. Bridge rectifier W1 and C6 convert the 200V AC from the secondary of T1, to DC. R6, D3, R4 and Q2 act as a constant current source being regulated by D4, R5 and Q1. The +5V line (TP2) is connected to the digital +5V line (TP3) on the Display Driver assembly.

3.13.3 5V Supply

All the logic circuitry to the right of the central printed circuit board is powered from the supply generated from the two 8.8 volt 750mA secondary windings on transformer T1. The centre tap (digital common) is linked directly to line ground via LK6. The output of rectifying diodes D1 and D2 is smoothed by C7 and C8 before being fed to regulator M1. This regulator is capable of 1 amp output and has foldback current limiting and thermal shut-down, to provide short circuit protection.

3.13.4 ±15V Supply

The output of the third secondary winding of transformer T1 (10V AC) is input to the primary of T2. The two 19.25V outputs are connected in series, with the centre tap connected to analog common. The output of bridge rectifier W2 is fed to voltage regulators M2 and M3 (wired in series), to produce positive and negative 15 volt supplies to power the analog circuitry. These regulators also include foldback current limiting and thermal shut-down, to provide short-circuit protection.

3.14 SELF TEST SEQUENCE

Selection of the TEST key places the instrument into a test routine, checking the display and basic measuring circuits. A flowchart for the routine is given in Fig. 3.53. The analog circuitry conditions for each test are given in the last subsection of the circuit description for the particular board, and the range 'F.E.T.' patterns in Appendix I-8.

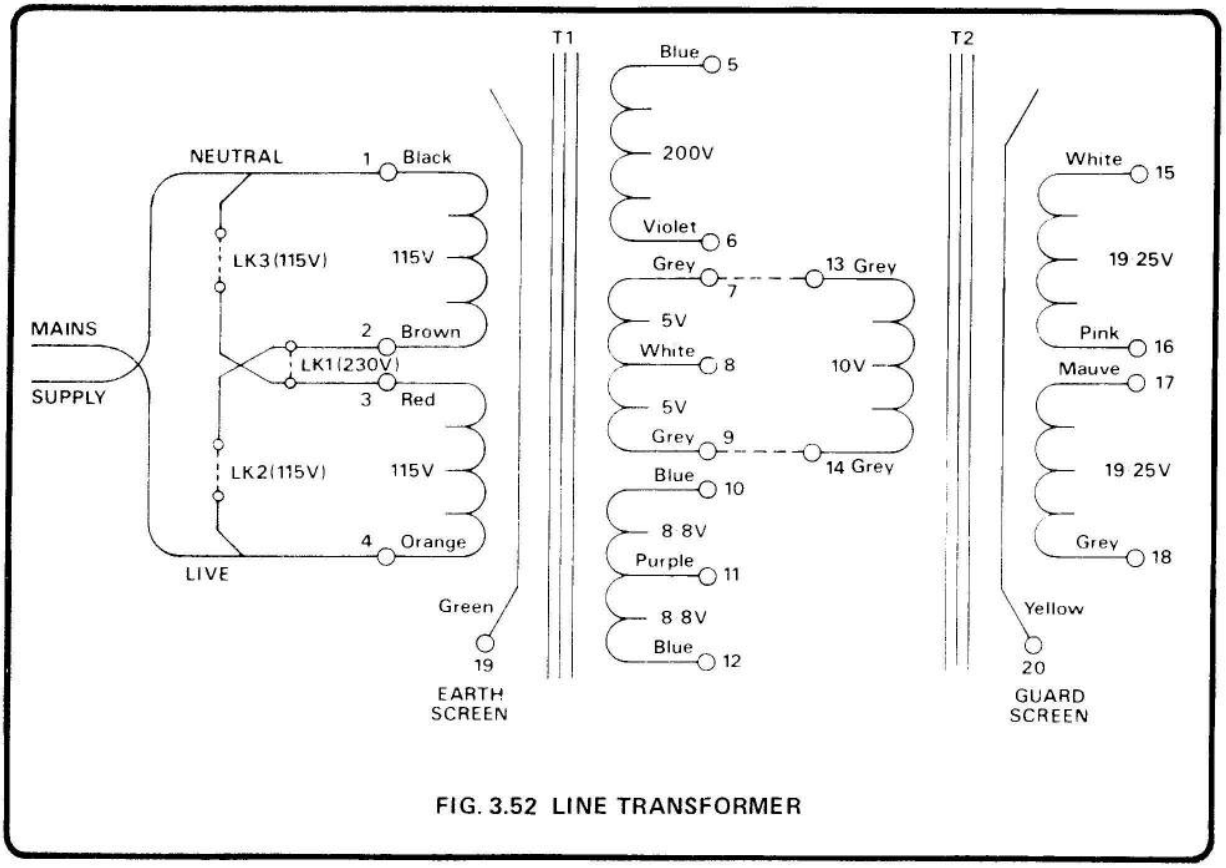

FIG. 3.52 LINE TRANSFORMER

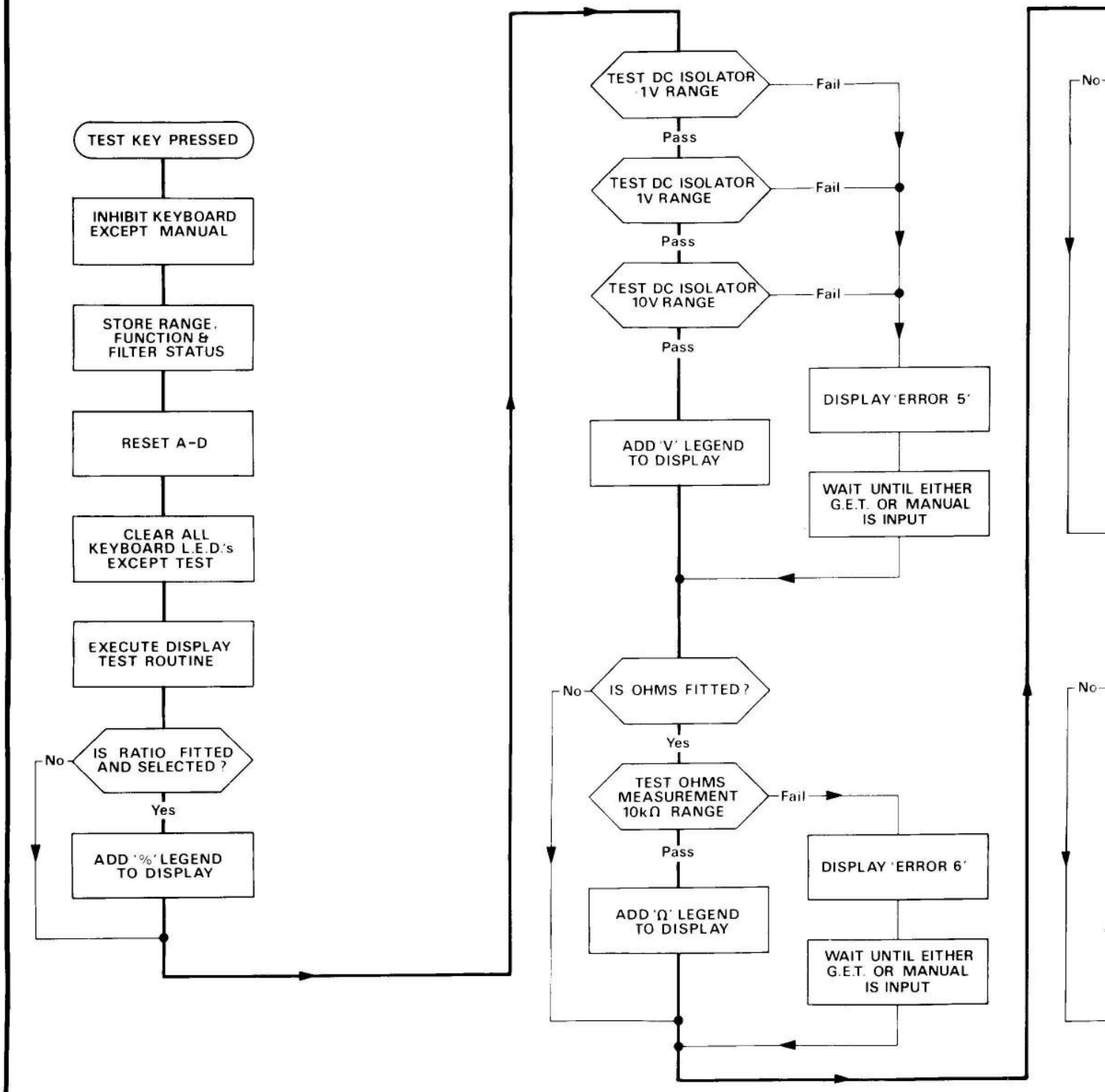

FIG. 3.53 FLOWCHART OF SELF-T

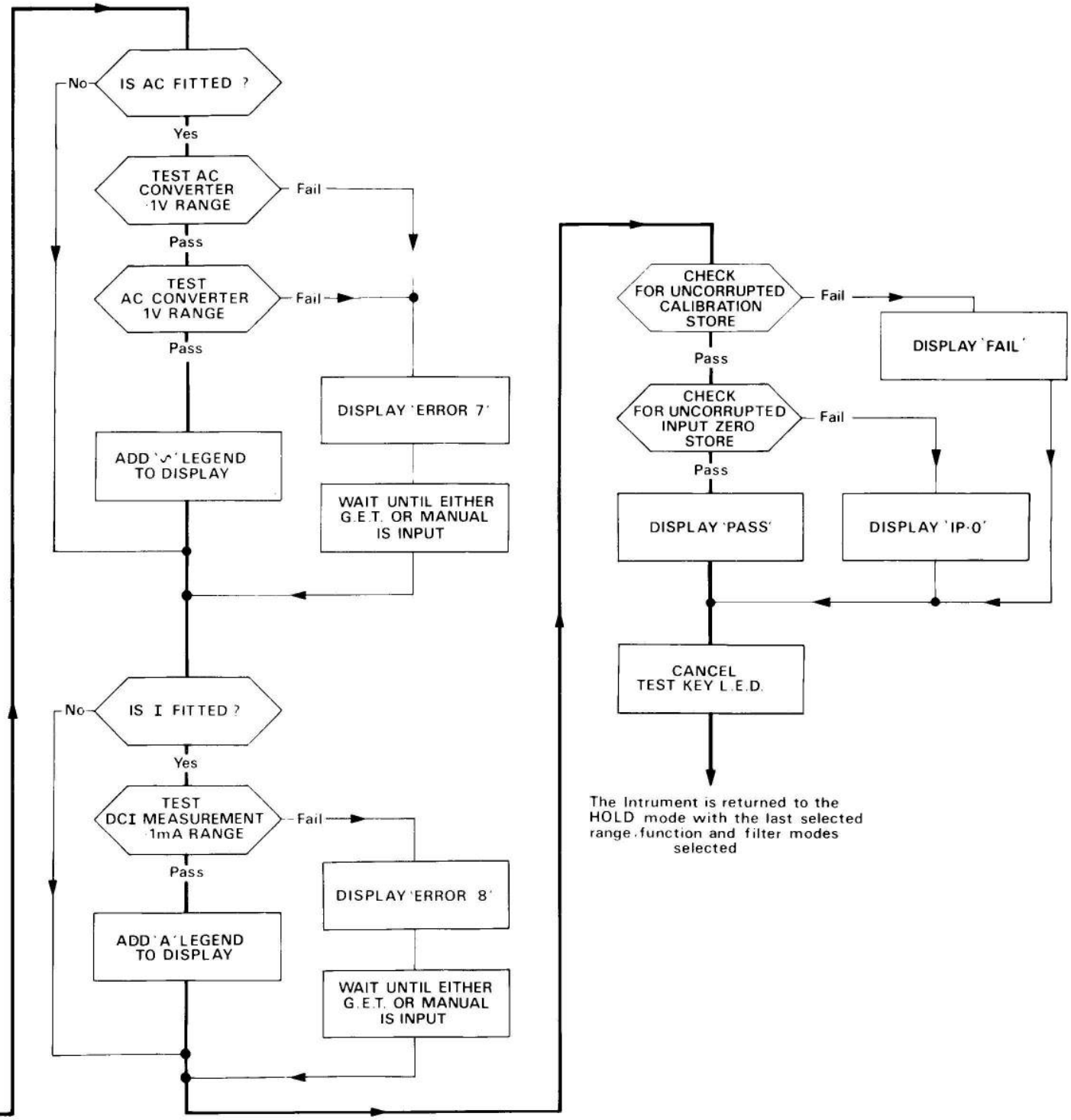

OF SELF-TEST ROUTINE

SECTION 4

INTERNAL ADJUSTMENT PROCEDURES

4.1 ALTERATION OF LINE VOLTAGE AND LINE FREQUENCY

The instrument is set to 50Hz, 205V to 255V supplies unless Option 80, 81 or 82 is specified. This information is carried on the instrument identification label located on the rear panel. Alteration to a different line voltage/line frequency may necessitate an instrument recalibration.

4.1.1 Changing Line Voltage

1. Disconnect power and all signal input/output leads.
2. Remove the lower cover.
3. Locate the link(s) connecting the split primary on the printed circuit board in front of the toroidal line transformer, Fig. 2.1 and Drawing No 400295.
4. 115V Operation:– Remove LK1 (link 1) and fit LK2 and LK3[1].
   230V Operation:– Remove links LK2 and LK3, and fit LK1[1].
5. Amend instrument identification label.
6. Replace lower cover.
7. Replace power fuses with 160mA anti-surge (230V) or 500mA anti-surge (115V).
8. Carry out the Specification Verification tests (Section 8, User's Handbook) and recalibrate if necessary.

4.1.2 Changing Line Frequency

1. Disconnect power and all signal input/output leads.
2. Remove the top cover.
3. 400Hz Operation:– Remove link LK5 and fit LK7[1] on the Digital assembly, (Drawing No. 400329).
   50/60Hz Operation:– remove link LK7 and fit LK5[1] on the Digital assembly (Drawing No. 400329).
4. Place instrument into HOLD. Adjust L2 (Digital assembly) so that TP7 is 1.05V ±0.03V with respect to Digital Common (TP28).

NOTE: This signal contains about 200mV peak-to-peak high frequency noise.

5. Amend instrument identification label.
6. Replace the top cover.
7. Carry out the Specification Verification tests (Section 8, User's Handbook) and recalibrate if necessary.

[1] Links should be 22 SWG TIN.Cu wire with silicone rubber sleeving.

4.2 BATTERY REPLACEMENT

The battery should be replaced on or before the date indicated on the rear panel instrument identification label. To retain the calibration memory, the instrument must be powered-up during replacement. Therefore great care must be taken due to voltages up to 260 volts being present inside the instrument.

1. Remove top cover and locate battery on the Digital assembly (see Fig. 2.1).
2. Power-up instrument.
3. Desolder battery at end of tags and remove from clip.
4. Replace with new battery, (Datron Part No. 920049) positive terminal to resistor.
5. Replace top cover.
6. Amend instrument identification label (Current date + 5 years).
7. Carry out the Specification Verification tests (Section 8, User's Handbook) and recalibrate if necessary.

4.3 POST-REPAIR PROCEDURES

Apart from the RMS Module (which is available only from Datron), all integrated circuits and semiconductor devices are standard manufacturers' products, and special selection is unnecessary. During manufacture certain resistors are selected in value (FSV = Factory Selected Value) to accommodate circuit component tolerances, or to bring the desired setting of a preset control to the middle of its adjustment range.

The thermal tracking of the DC Preamplifier is particularly important, to ensure a low order of zero drift with variations of temperature. This rather time consuming procedure is carried out initially during manufacture, and need only be repeated following replacement of Q12 or any component associated with the temperature compensation circuitry.

NOTE: A routine calibration as detailed in Section 1 should be carried out after completion of the following procedures.

CAUTION : Up to 260 volts is present inside the instrument. Personal contact with these points may result in injury.

4.3.1 Basic DC Instrument

Equipment Requirements:

4½ digit Digital Voltmeter e.g. Datron 1041
Variable 5V, 1 amp DC supply
5mV/division Oscilloscope e.g. Telequipment D83
1MΩ5% resistor in parallel with 10nF capacitor
10MΩ5% resistor in parallel with 10nF capacitor
DC Voltage Calibrator, e.g. Datron 4000/4000A Autocal Standard.

Procedure:

Power Supplies

1. Turn instrument on and allow 5 minutes warm-up period.

2. Connect DVM Hi to TP8 and Lo to TP28 on the Digital assembly. Adjust R2 on the Rear (Power Supply) pcb assembly to give +5.100V ±25mV.

3. Connect DVM Hi to TP1 and Lo to TP20 on the Analog assembly. Adjust R7 on the Rear (Power Supply) pcb assembly to give +15.000V ±15mV.

4. Connect DVM Hi to TP2 and Lo to TP20 on the Analog assembly. Adjust R12 on the Rear (Power Supply) pcb assembly to give −15.000V ±15mV.

Digital Assembly

5. Switch the instrument off and disconnect the power lead.

6. Isolate the Digital Board by removing the connectors along the centre panel (J1-J5).

7. Connect variable 5V supply and DVM Hi's to TP8, Lo's to TP28. Reduce supply to 4.750V ±10mV.

8. Set R83 fully clockwise. Connect oscilloscope Lo to TP28 and monitor M53 pin 40. Turn R83 anti-clockwise until TP30 undergoes a high to low transition (or begins to pulse low).

9. Remove variable supply and reconnect items disconnected in steps 5 and 6. Disconnect the oscilloscope. Switch on the instrument.

10. Connect DVM Hi to battery positive terminal, Low to TP28. Check battery voltage is >2.5 volts.

11. Disconnect DVM and connect oscilloscope Hi to TP25, Lo to TP28. Adjust scope trigger until the trace is triggered by the first pulse of each reading burst. Adjust R11 so that the pulses occur every 5ms ± 0.5ms.

12. Place instrument into HOLD. Connect oscilloscope Hi to TP7. Adjust L2 to give a stable +1.05 ±0.03V.
NOTE: This signal contains about 200mV peak to peak high frequency noise.

13. Insert calibration key into keyswitch on the back panel and turn, placing the instrument into CAL mode.
NOTE: The display CAL legend will be lit.

14. Short together pins 'D' and 'E' on Digital assembly.
NOTE: All the calibration store correction factors are now reset to zero.

15. Turn the calibration key back to RUN mode.

Analog Assembly (DC Isolator Section)

16. Centralize R150 and R160.

17. Select 0.1V range DC with FILTER out. Apply a 10MΩ resistor between instrument Hi and Lo. Connect DVM Hi to TL8, Lo to TP20.
Adjust FSV R152 with a metal film resistor (50ppm/°C) for a reading of < 10mV, using R159 for 'fine' adjustments.
Do not solder in R152.

18. Apply a short circuit across the input terminals and adjust R150 for a reading of < 50μV at TP13.

19. Connect DVM Hi to TP33 and adjust R160 for a reading of <20μV.

20. Repeat steps 17 to 19 until readings are within specified limits.

NOTE: The following step is only required after the replacement of Q12 or any component associated with the temperature compensation circuitry.

21. (i) Re-apply 10MΩ resistor across the input terminals. Note the reading on the front panel display (=A).
    (ii) Note the ambient temperature (=X°C).
    (iii) Place the instrument in a temperature controlled oven at approx 50°C without top cover and with power 'on'.
    (iv) Leave the instrument for at least 1 hour then note the reading on the display (=B) and the temperature of the oven (=Y°C).
    (v) Compute (B−A)/(Y−X) = Drift/°C.
    (vi) Remove instrument from oven and allow to stabilize, with power 'on' to ambient for one hour.
    (vii) If the drift was < 10 digits/°C proceed to (x).
    (viii) For drifts in excess of 10 digits/°C R151 must be adjusted. If the drift was positive turn R151 clockwise, if negative turn R151 anti-clockwise.
    (ix) Repeat from (i).
    (x) Lock R151 with a clean soldering iron.
    (xi) Repeat steps 17 to 20.

22. Solder in R152, with instrument turned off.

Analog Assembly (A-D Converter)

23. Select 100V range and apply short circuit between Hi and Lo. Connect DVM Hi to TP7, Lo to TP20. If reading is +6.42V ±0.03V proceed to step 25.

24. Switch off instrument and make positive reference links B & C, if cut i.e. the links alongside TP7. Switch on instrument and measure voltages on TP7 once again. Consult Fig. 4.1 and cut links as indicated. Repeat step 23.

Voltage on TP7 or TP8	TL'B'	TL'C'
6.42	–	–
6.47	–	✓
6.525	✓	–
6.58	✓	✓

Select voltage closest to measured value and cut links

FIG 4.1 REFERENCE SELECTION VOLTAGES

25. Connect DVM Hi to TP8. If reading is -6.42V ± 0.03V proceed to step 27.

26. Switch off instrument and make negative reference links A to C, if cut i.e. the links alongside TP8. Switch on instrument and measure voltage on TP8 once again. Consult Fig 4.1 and cut links as indicated. Repeat Step 25.

27. Select HOLD. Connect DVM Hi to TP9. Select correct resistance value for FSV R11 or R15 to give a reading of 0V ±1mV. Solder in resistor.

28. Deselect HOLD and disconnect DVM. Select 1000V range and apply +19mV. Connect oscilloscope Lo to TP21, Hi to TP5. Adjust R20 for noisy waveform at zero point.

29. Remove oscilloscope. Replace covers but do not replace screws. Select 1V, DC, filter out and apply 1MΩ across input terminals. Turn rear panel keyswitch to CAL mode and select LIN.

30. Select .1V range and apply 10MΩ across input terminals. Select Ib. Repeat until display reads less than 50 digits.

31. Select 10V range, FILTER and apply short copper link across input terminals. Select ZERO.

32. Apply +10 volts and select GAIN. Repeat until display reads +10.0000 ± ½ digit.

33. Apply +19 volts. If the display reads within the limits +18.9999 to +19.0001, proceed to step 35.

34. Calculate E = (19 - displayed reading)/2.
Re-apply +10 volts and adjust R23 for a displayed reading of 10 - E.
Repeat steps 32-34 until both readings are within the limits indicated.

35. Turn rear panel keyswitch to RUN mode.

The basic DC only instrument set-up procedure is complete.

4.3.2 Ohms Assembly

Equipment Required:
5½ digit DVM, e.g. Datron 1065, or 1061.
10 Megohm 5% resistor in parallel with a 10nF capacitor, e.g. Datron Part No. 400392.
Copper shorting links, and a short wire link.

Procedure.

1. Select 10 kilohm range, 4-wire. Connect I– to Ohms Guard, I+ to Hi, and 10 Megohm resistor between Hi and Lo.

2. Connect DVM Hi to TP4, Lo to TP1 and adjust R26 (bias current) for a reading of Zero ± 300μV.

3. Disconnect the 10 Megohm resistor, and connect a copper shorting link in its place between Hi and Lo.

4. Transfer DVM Hi from TP4 to TP14, and adjust R27 (Q10 offset) for Zero ± 2μV.
N.B. Ensure that the DVM used for measurement is correctly zeroed!

5. Repeat steps 1-4 until the readings are within the specified limits.

6. Connect Lo to Ohms Guard. Connect a shorting link between TP1 and TP3.

7. Transfer DVM Hi from TP14 to TP13, and check that the reading is zero ± 50μV.
If reading > +50μV, reselect FSV resistor R40 to bring the reading within limits.
If reading < –50μV, reselect FSV resistor R39 to bring the reading within limits.
NB R39 and R40 must each be at least 100 kilohms.

8. Remove the link from TP1 and TP3. Disconnect the DVM leads, and the connections from the front panel.

The basic Ohms set-up procedure is now complete.

4.3.3 OPTION 10 AC Assembly

Equipment Required:

5mV/Div oscilloscope. e.g. Telequipment D83.
5½ digit DVM with Ohms. e.g. Datron 1065, 1061.
DC calibrator. e.g. Datron 4000 or 4000A.
AC calibrator. e.g. Datron 4200.
Asymmetric signal, 1V RMS, Crest Factor 5:1 ±0.02%, reversible polarity.

Procedure

1. Select AC 1000V range and HOLD. Short Hi to Lo. Connect DVM Hi to TL7, Lo to TP8 and note reading. Select 1V range and adjust R121 (bias current) to give same reading ±10μV.

2. Select 100mV range, AC + DC and adjust R112 (offset adjust) for an indication of zero ±50μV on the DVM.

3. Repeat steps 1. and 2. until readings are within the specified limits.

4. Select 10V range and HOLD. Connect oscilloscope Hi to TP5, Lo to TP8 and adjust R90 (rectifier zero) for maximum noise about zero. Remove the oscilloscope.

5. Connect DVM Hi to TP2, Lo to TP8 and adjust R75 (linearity) for an indication on the DVM of 1.8mV ±10%.

6. Select AC, 1V range, FILTER and apply 1V 500Hz. Connect DVM Hi to TL5, Lo to TP8. If reading is +3.157V ±0.01V proceed to step 8.

7. Disconnect input signal and switch off instrument, Make links TL1 to TL4 if cut. Switch on instrument, reselect AC, 1V range, FILTER and reapply 1V, 500Hz. Measure voltage on TL5. Consult Fig. 4.2 and cut links as indicated. Check voltage on TL5 is 3.157V ±0.01V. Remove the DVM.

8. Deselect HOLD and short circuit instrument Hi and Lo. Turn rear panel key switch to CAL mode and select ZERO. Repeat for all ranges.

9. Select 1V range. Apply 1 volt (d.c.) and note reading on display. Apply −1 volt (d.c.) and adjust R50 (d.c. turnover) for same display indication ±10 digits.

10. This part of the procedure must be performed with the high frequency compensation voltage, at J1-11/R57, at −5V ±0.2V.

    a. Select AC 100V range, FILTER and apply 100V, 500Hz. Select GAIN. Apply 100V, 50kHz and adjust C62 for a display of 100.000V ±20 digits.

    b. Apply 100V, 100kHz note error and adjust C61 to double the displayed error in the same direction.

    c. Repeat a. and b. until 50kHz and 100kHz displays are within ±20 digits.

    d. Select 1V range and apply 1 volt, 500 Hz. Select GAIN. Apply 1V 50kHz and adjust C63 for a display of 1.00000V ±20 digits.

11. Apply 1 volt 5:1 crest factor signal. Adjust R35 (crest factor) for a display of 1.00000V ±30 digits.

12. Open circuit input. Turn rear panel key switch to RUN. Select TEST and check for a display of PASS. Turn rear panel key switch to CAL.

13. Select 10V range and apply 10V, 50kHz. Check display is 10.0000V ±1200 digits. Check that the display can be calibrated to 10.0000 ±20 digits by less than 5 presses of the AC HF key.

14. Select 100mV range and apply 100mV 50kHz. Check display is 100.000mV ±500 digits. Check that display can be calibrated to 100.000mV ±20 digits by less than 5 presses of the AC HF key.

15. Select 1000V range and apply 1000V, 500Hz. Select GAIN.

16. Apply 1000V, 25kHz and check display is 1000.00V ±1200 digits. Check that display can be calibrated to 1000.00V ±20 digits by less than 5 presses of the AC HF key. Remove 1000V and turn rear panel key switch to RUN.

The basic AC set-up procedure is complete.

Voltage on TL5	TL1	TL2	TL3	TL4
3.157	–	–	–	–
3.178	–	–	–	✓
3.198	–	–	✓	–
3.218	–	–	✓	✓
3.239	–	✓	–	–
3.259	–	✓	–	✓
3.280	–	✓	✓	–
3.300	–	✓	✓	✓
3.320	✓	–	–	–
3.340	✓	–	–	✓
3.360	✓	–	✓	–
3.380	✓	–	✓	✓
3.400	✓	✓	–	–
3.420	✓	✓	–	✓
3.440	✓	✓	✓	–
3.460	✓	✓	✓	✓

Select voltage closest to measured value and cut links

FIG 4.2 OPTION 10 AC ASSEMBLY OUTPUT SELECTION VOLTAGES

4.3.4 OPTION 12 AC Assembly

Equipment Required:

5mV/Div oscilloscope. e.g. Telequipment D83.
5½ digit DVM with Ohms. e.g. Datron 1065, 1061.
DC calibrator. e.g. Datron 4000 or 4000A.
AC calibrator. e.g. Datron 4200.
Asymmetric signal, 1V RMS, Crest Factor 5:1 ±0.02%, reversible polarity.

CAUTION
The following procedures should commence with the HF Autocal voltage close to the center of its span. To check this, select the 100V AC range and measure the DC voltage at J1-11 with respect to TP8. If it is between +4V and +6V, it is NOT necessary to clear the calibration stores. If outside these limits, the cal stores should be cleared as described in para 4.3.1 operations (13), (14) and (15).

CLEARING THE CAL STORES ENTAILS A FULL 'AUTOCAL' OF THE INSTRUMENT!

Before proceeding; ensure that at least the Analog Assembly LIN and I_b Autocalibrations have been carried out.

AC Preamplifier Zero

1. Read and comply with the CAUTION above.
2. Apply short circuit input. Select AC + DC, 100mV range and HOLD.
3. Connect DVM Lo to TP8, Hi to Test link K (TLK). Adjust R148 (bias current) for a reading of zero, ±140μV.
4. Select 100mV range AC, and check that the reading is zero, ±140μV. It may be necessary to re-adjust R148 to obtain this value. If so, recheck operation 3.
5. Select each range in turn, and check that the DVM reading is within ±70μV of zero (except 100mV range: ±140μV).

Set up RMS Converter

6. Select 10V range. Adjust R119 (Rectifier zero) for the most negative (or least positive) reading on the display.
7. Connect DVM to TLH. Adjust R101 (linearity) for a reading of +1.1mV±10%.
8. Select 100mV range. Check that the DVM reading is between 0.8mV and 1.8mV.
9. Select 1V range and apply 1V, 500Hz, with the DVM still connected to TLH. Remake links TLC-TLF. Then after recording the TLH voltage, refer to Fig. 4.2 and cut the links (✓) as appropriate to give a DVM reading of 3.157V ±0.010V.

TLH Voltage	Cut Test Links C	D	E	F	Gain*
2.887 - 2.904	✓	✓	✓	✓	1.090
2.904 - 2.920	✓	✓	✓	x	1.084
2.920 - 2.937	✓	✓	x	✓	1.078
2.937 - 2.954	✓	✓	x	x	1.072
2.954 - 2.973	✓	x	✓	✓	1.065
2.973 - 2.988	✓	x	✓	x	1.059
2.988 - 3.004	✓	x	x	✓	1.054
3.004 - 3.021	✓	x	x	x	1.048
3.021 - 3.038	x	✓	✓	✓	1.042
3.038 - 3.055	x	✓	✓	x	1.036
3.055 - 3.071	x	✓	x	✓	1.031
3.071 - 3.090	x	✓	x	x	1.025
3.090 - 3.110	x	x	✓	✓	1.018
3.110 - 3.128	x	x	✓	x	1.012
3.128 - 3.147	x	x	x	✓	1.006
3.147 - 3.167	x	x	x	x	1.000

*Increase in TLH voltage when links are cut.

FIG. 4.3 OPTION 12 AC ASSEMBLY OUTPUT SELECTION VOLTAGES

Check Spec Readout Frequency Flags

10. Select HOLD. Connect DVM to TP6. Adjust the applied frequency and note that TP6 changes logic state at a frequency between 1.8kHz and 2.2kHz. Disconnect the DVM.

Set Range 'Zeros'

11. Deselect HOLD, and apply 500Hz at 0.1% FR input to each range in turn. Perform ZERO autocal on each range, using the instrument display to check that each range calibrates to 100 digits ±3 digits. Disconnect the input.
12. Apply a short circuit to the input, short Guard to Lo and select each range in turn. Check that the reading on each range is zero ±10 digits on the display (except 100mV range ±30 digits). Remove the shorts.

Set up DC-DC Turnover

13. Select 1V range, AC + DC. Apply 1V 500Hz and perform GAIN autocal.

14. Apply +1V DC and note the displayed reading.

15. Apply −1V DC and adjust R62 (DC turnover) for the same reading as in operation (14). (±3 digits).

16. Repeat (13) to (15) until all readings are the same to within ±20 digits.

Set up Coarse Frequency Response

17. Select 100V range, AC; apply 100V, 500Hz and perform GAIN autocal. Apply 100V, 50kHz and adjust C82 for a display reading of 100.000V ±20 digits. (If necessary change C81 to a value which permits this adjustment).

18. Apply 100V, 100kHz and note the reading error. Adjust C79 to give 5 times the error in the same direction.

19. Repeat (17) and (18) until the 50kHz and 100kHz readings are separated by less than 20 digits.

20. Select 1V range, AC; apply 1V, 500Hz and perform GAIN autocal. Apply 1V, 50kHz and adjust C84 for a display reading of 1.00000V ±20 digits. (If necessary change C85 to a value which permits this adjustment).

Set up Crest Factor

21. Apply 1VRMS, +ve 5:1 Crest Factor signal. Adjust R61 (crest factor) for a display reading of 1.00000V ±30 digits.

22. Apply 1VRMS, −ve 5:1 Crest Factor signal. Check that display reading is 1.00000V ±30 digits.

23. Apply 1V, 500Hz, and perform GAIN Autocal. Repeat (21), (22) and (23) until crest factor readings are within limits.

Linearity Checks

24. Select 1V range, AC + DC. Apply 1V DC and perform GAIN Autocal.

25. Apply 1.9V DC and adjust R27 value (Factory Selected Value - FSV) for a display reading of 1.90000V ±6 digits (reducing R27 increases reading).

26. Repeat (24) and (25) until both correct.

27. Select 1V range AC. Apply in turn 1V, 100mV, 10mV, at 500Hz and check that display reading is correct to within ±10 digits of the input voltage.

28. Apply open circuit input, set CAL/RUN switch to RUN; press 'Test' and check for a display of 'PASS'.

Output Buffer Check

29. Select 1V range, AC + DC, no filter. Apply 1V DC and set CAL switch to RUN. Use the 'A-B' computation mode to null out the reading: press STORE, B, then (A-B).

30. Select filter, and leave to settle for at least 30 seconds. Check that the displayed reading is within ±50 digits of zero.

31. Repeat (28).

The AC set-up procedure is now complete.

APPENDIX 1

ANALOG DATA LINE 'F.E.T.' PATTERNS

DC Voltage

Range		DC Isolator							
		AD0	AD1	AD2	AD3	AD4	AD5	AD6	AD7
1	100mV	0	0	0	0	0	1	1	X
2	100mV	0	0	0	0	0	1	1	X
3	1V	0	0	0	0	1	1	1	X
4	10V	0	0	0	0	1	0	1	X
5	100V	0	0	0	0	1	1	0	X
6	1000V	0	0	0	0	1	0	0	X
7	1000V	0	0	0	0	1	0	0	X

AC Voltage

Range		AC assembly							
		AD0	AD1	AD2	AD3	AD4	AD5	AD6	AD7
1	100mV	0	0	1	0	0	0	1	X
2	100mV	0	0	1	0	0	0	1	X
3	1V	0	0	1	0	0	0	0	X
4	10V	0	0	0	1	0	0	0	X
5	100V	0	0	0	0	1	0	0	X
6	1000V	0	0	0	0	0	1	0	X
7	1000V	0	0	0	0	0	1	0	X

DC Coupled AC Voltage

Range		AC assembly							
		AD0	AD1	AD2	AD3	AD4	AD5	AD6	AD7
1	100mV	0	1	1	0	0	0	1	X
2	100mV	0	1	1	0	0	0	1	X
3	1V	0	1	1	0	0	0	0	X
4	10V	0	1	0	1	0	0	0	X
5	100V	0	1	0	0	1	0	0	X
6	1000V	0	1	0	0	0	1	0	X
7	1000V	0	1	0	0	0	1	0	X

Ohms

Range	DC Isolator								Ohms assembly							
	AD0	AD1	AD2	AD3	AD4	AD5	AD6	AD7	AD0	AD1	AD2	AD3	AD4	AD5	AD6	AD7
1 10Ω	0	0	0	0	0	1	1	X	0	0	0	0	0	0	1	X
2 100Ω	0	0	0	0	1	1	1	X	0	0	0	0	0	0	1	X
3 1kΩ	0	0	0	0	1	1	1	X	0	0	0	0	0	1	0	X
4 10kΩ	0	0	0	0	1	1	1	X	1	0	0	0	0	0	0	X
5 100kΩ	0	0	0	0	1	1	1	X	0	0	0	0	1	0	0	X
6 1MΩ	0	0	0	0	1	1	1	X	0	0	1	1	0	0	0	X
7 10MΩ	0	0	0	0	1	1	1	X	0	1	0	1	0	0	0	X

DC Current

Range	DC Isolator								Current assembly							
	AD0	AD1	AD2	AD3	AD4	AD5	AD6	AD7	AD0	AD1	AD2	AD3	AD4	AD5	AD6	AD7
1 100μA	0	0	0	0	0	1	1	X	0	1	0	0	0	0	1	X
2 100μA	0	0	0	0	0	1	1	X	0	1	0	0	0	0	1	X
3 1mA	0	0	0	0	0	1	1	X	1	0	0	0	0	0	1	X
4 10mA	0	0	0	0	0	1	1	X	1	1	1	0	0	0	1	X
5 100mA	0	0	0	0	0	1	1	X	1	1	0	1	0	0	1	X
6 1A	0	0	0	0	0	1	1	X	1	1	0	0	1	0	1	X
7 1A	0	0	0	0	0	1	1	X	1	1	0	0	1	0	1	X

AC Current

Range	AC assembly								Current assembly							
	AD0	AD1	AD2	AD3	AD4	AD5	AD6	AD7	AD0	AD1	AD2	AD3	AD4	AD5	AD6	AD7
1 100μA	0	0	1	0	0	0	1	X	0	1	0	0	0	1	0	X
2 100μA	0	0	1	0	0	0	1	X	0	1	0	0	0	1	0	X
3 1mA	0	0	1	0	0	0	1	X	1	0	0	0	0	1	0	X
4 10mA	0	0	1	0	0	0	1	X	1	1	1	0	0	1	0	X
5 100mA	0	0	1	0	0	0	1	X	1	1	0	1	0	1	0	X
6 1A	0	0	1	0	0	0	1	X	1	1	0	0	1	1	0	X
7 1A	0	0	1	0	0	0	1	X	1	1	0	0	1	1	0	X

DC Coupled AC Current

Range	AC assembly								Current assembly							
	AD0	AD1	AD2	AD3	AD4	AD5	AD6	AD7	AD0	AD1	AD2	AD3	AD4	AD5	AD6	AD7
1 100μA	0	1	1	0	0	0	1	X	0	1	0	0	0	1	0	X
2 100μA	0	1	1	0	0	0	1	X	0	1	0	0	0	1	0	X
3 1mA	0	1	1	0	0	0	1	X	1	0	0	0	0	1	0	X
4 10mA	0	1	1	0	0	0	1	X	1	1	1	0	0	1	0	X
5 100mA	0	1	1	0	0	0	1	X	1	1	0	1	0	1	0	X
6 1A	0	1	1	0	0	0	1	X	1	1	0	0	1	1	0	X
7 1A	0	1	1	0	0	0	1	X	1	1	0	0	1	1	0	X

TEST

Function Tested	Range Checked	DC Isolator								Option assembly							
		AD0	AD1	AD2	AD3	AD4	AD5	AD6	AD7	AD0	AD1	AD2	AD3	AD4	AD5	AD6	AD7
DC	.1	0	0	0	0	0	1	0	1								
	1	0	0	0	0	1	1	0	1								
	10	0	0	0	0	1	0	0	1								
kΩ	10	0	0	0	0	1	1	1	1	Ohms assembly 0	1	0	1	0	0	0	1
AC	.1	Not used								AC assembly 0	1	1	0	0	0	1	0
	1									0	1	1	0	0	0	0	0
I	.1	0	0	0	0	0	1	1	1	I assembly 0	1	0	0	0	0	1	1

DESIGNATOR	DATRON PART No.	DESCRIPTION	PRINCIPAL MANUFACTURER	MANUFACTURER'S PART No.	No. USED Per Assy
R1	090001	P.T.C. THERMISTOR	MULLARD	VA8650	2
R2	090001	P.T.C. THERMISTOR	MULLARD	VA8650	—
R3	000151	150 Ω 1/4 W CARBON	MULLARD	CR25	8
R4	000151	150Ω " " "	"	"	—
R5	000151	150Ω " " "	"	"	—
R6	000102	1K 1/4 W CARBON	"	CR25	2
R7	000104	100K 1/4 W. CARBON	MULLARD	CR25	1
R8	000151	150 Ω 1/4 W CARBON	MULLARD	CR25	—
R9	000151	150Ω " " "	"	"	—
R10	000151	150Ω " " "	"	"	—
R11	000151	150Ω " " "	"	"	—
R12	000151	150Ω " " "	"	"	—
R13	000102	1K " " "	"	"	—
R14	000472	4K7 " " "	"	"	1
AN1	090032	150R x7 2% NETWORK	BECKMAN	764-1-R150	2
AN2	090032	" " " "	"	"	—
C1	102101	100PF CER DISC	ERIE	801	1
C2	150002	10μF 20% 16V DIP TANT	UNION CARBIDE	K10E16	2
C3	150016	1·0 μF 20% 35V "	UNION CARBIDE	K1R0E35	2
C4	101103	0·01μF 250V CER DISC	ERIE	801	3

NOTES. CIRCUIT DIAG 430294
CHECK PROC. 460294
CHECK LIST 470294
SEE SHEET 2 FOR LATEST ISSUE

ISS	C	D	1 C	2	3	4 C	5	6	7	8	9	10	11	12	13
ECO	—		RELEASED	ECO 778	816/818	867	988	1111	1213	1352	1472	1662	1661	1815	1823
DATE	—	17-8-78	29-9-78	6-12-78	25 JAN 79	[illegible]	26 OCT 79	21 4 80	11-6-81	1-7-82	2.6.83	6.8.84	10.9.84	10.1.85	23-1-86
CHKD	—	MD	MD	MD	MD	MD	MD	MD	MD	MD	MD	MD	MD	MD	MD

DATE 28-4-78
DRAWN B.J
CHECKED [signature]
APPD
DATE

datron ELECTRONICS LTD
TITLE 1061/1071/1081 FRONT P.C.B. ASSY
DRAWING NUMBER 400294
SHEET 2 OF 6

DESIGNATOR	DATRON PART No.	DESCRIPTION	PRINCIPAL MANUFACTURER	MANUFACTURER'S PART No.	No. USED Per Assy
C5	101103	0·01μF 250V CER DISC	ERIE	801	—
C6	150016	1·0 μF 20% 35V DIP TANT	UNION CARBIDE	K1R0E35	—
C7	101103	0·01μF 250V CER DISC	ERIE	801	—
C8	150002	10μF 20% 16V DIP TANT	UNION CARBIDE	K10E16	—
C9	104023	2n2F 20% 1KV CER DISC	ITT	HD16K102N2M5-SSIK0DSC	1
C10		NOT USED			
C11	150006	4μ7 20% 16V DIP TANT	UNION CARBIDE	K4R7E16	1
Q1	240001	Si NPN	NATIONAL	BC184K	6
Q2	240001	Si NPN	NATIONAL	BC184K	—
Q3	240001	" "	"	"	—
Q4	240001	" "	"	"	—
Q5	240001	" "	"	"	—
Q6	240001	" "	"	"	—
M1	290042	GP HIGH CURRENT TRANS ARRAY	R.C.A	CA3081P	3
M2	280011	DUAL D FLIP-FLOP	MOTOROLA	MC14013BCP	1
M3	290042	GP HIGH CURRENT TRANS ARRAY	R.C.A	CA3081P	—
M4	280015	QUAD LATCH	MOTOROLA	MC14076	7

NOTES

SEE SHEET 2 FOR LATEST ISSUE

ISS												
ECO												
DATE												
CHKD												

DATE
DRAWN B.J
CHECKED [signature]
APPD
DATE

datron ELECTRONICS LTD
TITLE 1061/71/81 FRONT P.C.B. ASSY
DRAWING NUMBER 400294
SHEET 3 OF 6

DESIGNATOR	DATRON PART No.	DESCRIPTION	PRINCIPAL MANUFACTURER	MANUFACTURER'S PART No.	No. USED Per Assy
M5	280015	QUAD LATCH	MOTOROLA	MC14076	—
M6	280015	" "	"	"	—
M7	280067	16WAY KEYBOARD ENCODER	NATIONAL	MM74C922	2
M8	280015	QUAD LATCH	MOTOROLA	MC14076	—
M9	280015	QUAD LATCH	"	"	—
M10	280067	16 WAY KEYBOARD ENCODER.	NATIONAL	MM74C922	—
M11	280015	QUAD LATCH	MOTOROLA	MC14076	—
M12	280015	" "	"	"	—
M13	290042	G.P. HIGH CURRENT TRANS ARRAY	RCA	CA3081P	—
S1	700019	SLIDE SWITCH	SIEMENS	C-42315-A60-A1	2
S2	700019	" "	"	"	—
S3	700061	KEYBOARD SWITCH. RED LED	SCHADOW	SRL-RED LED	24
S4	700061	" " " "	"	" " "	—
S5	700061	" " " "	"	" " "	—
S6	700061	" " " "	"	" " "	—
S7	700061	" " " "	"	" " "	—
S8	700061	" " " "	"	" " "	—
S9	700061	" " " "	"	" " "	—
S10	700062	KEYBOARD SWITCH GREEN LED	SCHADOW	SRL - GREEN LED	2

NOTES.

SEE SHEET 2 FOR LATEST ISSUE

ISS												
E.C.O.												
DATE												
CHKD												

DATE

DRAWN B.J

CHECKED

APPROVED

DATE

datron ELECTRONICS LTD

TITLE 1061/71/81 FRONT P.C.B ASSY

DRAWING NUMBER 400294

SHEET 4 OF 6

DESIGNATOR	DATRON PART No.	DESCRIPTION	PRINCIPAL MANUFACTURER	MANUFACTURER'S PART No.	No. USED Per Assy
S11	700061	KEYBOARD SWITCH. RED LED.	SCHADOW	SRL - RED LED	—
S12	700061	" " " "	"	" " "	—
S13	700061	" " " "	"	" " "	—
S14	700061	" " " "	"	" " "	—
S15	700061	" " " "	"	" " "	—
S16	700061	" " " "	"	" " "	—
S17	700061	" " " "	"	" " "	—
S18	700061	" " " "	"	" " "	—
S19	700061	" " " "	"	" " "	—
S20	700061	" " " "	"	" " "	—
S21	700061	" " " "	"	" " "	—
S22	700061	" " " "	"	" " "	—
S23	700061	" " " "	"	" " "	—
S24	700061	" " " "	"	" " "	—
S25	700061	" " " "	"	" " "	—
S26	700061	" " " "	"	" " "	—
S27	700061	" " " "	"	" " "	—
S28	700062	KEYBOARD SWITCH GREEN LED.	SCHADOW	SRL-GREEN LED	—

NOTES.

SEE SHEET 2 FOR LATEST ISSUE

ISS												
E.C.O.												
DATE												
CHKD												

DATE

DRAWN B.J

CHECKED

APPROVED

DATE

datron ELECTRONICS LTD

TITLE 1061/71/81 FRONT P.C.B. ASSY

DRAWING NUMBER 400294

SHEET 5 OF 6

DESIGNATOR	DATRON PART No.	DESCRIPTION	PRINCIPAL MANUFACTURER	MANUFACTURER'S PART No.	No USED Per Assy
	400573	SIGNAL CABLE ASSY			1
	450451-2	RM10 INSULATOR.			1
	410090-7	PRINTED CIRCUIT BOARD			1
	450179-1	TERMINAL PLATE.			1
	605060	IC SOCKET 14 WAY	AUGAT	314-AG-39D	1
	605061	IC. SOCKET 16 WAY	AUGAT	316-AG-39D	10
	605062	IC SOCKET 18 WAY	AUGAT	318-AG-39D	2
	630099	MASKING TAPE	3M		A/R
	630024	INSULATING BEADS			8
	800017	8½ DIGIT DISPLAY	DALE		1
	920015	Low E.M.F. TERM BLK/BLK	CLIFF	TPI - SPECIAL	1
	920041	" " " BLK/RED	CLIFF	" "	1
	920042	NOT Low E.M.F TERM BLK/WH	"	TPI	1
	920043	" " " " BLK/BRN	"	"	1
	920044	" " " " BLK/BLUE	"	"	1
	920045	" " " " BLK/YELLOW	"	"	1
	630029	DOUBLE SIDED PRESSURE SENSITIVE TAPE.	3M	TYPE 4032	290mm
	420080-1	WARNING LABEL			1

NOTES.

SEE SHEET 2 FOR LATEST ISSUE

ISS													
DATE													

DATE

DRAWN B.J.B

CHECKED

APPROVED

DATE

datron ELECTRONICS LTD

TITLE 1061/71/81 FRONT P.C.B. ASSY.

DRAWING NUMBER 400294

SHEET 6 OF 6

DESIGNATOR	DATRON PART No.	DESCRIPTION	PRINCIPAL MANUFACTURER	MANUFACTURER'S PART No.	No. USED Per Assy.
R1		NOT USED			–
R2	066200	20R POT 3/8 SQ VERT CERMET	BECKMAN	72XW	1
R3	000221	220R 5% 1/4W CARBON	MULLARD	CR25	1
R4	014320	432R 1% M.F.	HOLCO	H.8	1
R5	000102	1K 5% 1/4W CARBON	MULLARD	CR25	2
R6	001184	180K 5% 1/2W CARBON	MULLARD	CR37	1
R7	066102	1K 3/8" RIGHT ANGLED CER. POT.	BECKMAN	72XW	1
R8	014021	4K02 1% 1/8W M.F.	HOLCO	H.8.	1
R9	019091	9K09 1% 1/8W M.F.	HOLCO	H.8.	1
R10	012001	2K 1% 1/8W M.F.	HOLCO	H.8.	1
R11	011302	13K 1% 1/8W M.F.	HOLCO	H.8.	1
R12	066501	500R 3/8" RIGHT ANGLED CER. POT	BECKMAN	72XW	1
R13	000102	1K 5% 1/4W CARBON.	MULLARD	CR25	–
L1	370001	10μH 0.85Ω R.F. CHOKE.	PLESSEY	58/10/0011/10	3
L2	370001	10μH " "	"	"	–
L3	370001	10μH " "	"	"	–
C1	NOT USED				–
C2	NOT USED.				–
C3	NOT USED.				–

NOTES. CIRCUIT DIAG. 430295.
CHECK PROC. 460295.
CHECK LIST. 470295.
SEE SHEET 2 FOR LATEST ISSUE

ISS	C	D	1	2	3	4	5	6	7	8	9	10	11	12
ECO	–	–	RELEASED	ECO 783	ECO 816	876 882 900	991 994	1085 1097	1441	1452	1470	1517	1529	1688
DATE	–	22-8-78	29-9-78	8-12-78	25 JAN 79	6 JUN 79	31-10-79	21.4.80	11-2-83	16.2.83	1.6.83	16-8-83	15-9-83	20.8.84
CHKD	–	MD		MD	MD	MD	MD	MD	MD	MD	MD	MD	MD	MD

DATE 2-5-78 DRAWN B.J. CHECKED M.L.M. APPROVED DATE

datron ELECTRONICS LTD

TITLE 1061/1071/1081 REAR P.C.B. ASSY.

DRAWING NUMBER 400295 SHEET 2 OF 6

DESIGNATOR	DATRON PART No.	DESCRIPTION	PRINCIPAL MANUFACTURER	MANUFACTURER'S PART No.	No. USED Per Assy.
C4		NOT USED			
C5	101103	0.01μF 250V CER DISC	ERIE	801	3
C6	180026	10μF 350V ELECT	ITT	EN12/12 10/350	1
C7	180004	4700μF 16V AL ELECT	WIMA	PRINTILYT	1
C8	104026	47nF +50 −20 % 50V CER DISC	SIEMENS	B37449	1
C9	150003	47μF 20% 6V3 DIP TANT	UNION CARBIDE	K47E6V3	1
C10	150021	22μF 20% 25V DIP. TANT	UNION CARBIDE	K22E25	2
C11	150021	" " " "	" "	"	–
C12	101103	0.01μF 250V. CER. DISC.	ERIE	801	–
C13	180025	1000μF 35V ELECT.	WIMA	PRINTILYT	2
C14	101103	0.01μF 250V. CER DISC	ERIE	801	–
C15	180025	1000μF 35V ELECT	WIMA	PRINTILYT	–
C16	102102	1nF 10% 500V CER DISC	ITT	CD10.	1
D1	200022	Si RECTIFIER 3A 400V	MOTOROLA	BY252	2
D2	200022	" " "	" "	"	–
D3	210068	6V8 400mW ZENER	MULLARD	BZY88C6V8	1
D4	213004	180V 500mW ZENER	MOTOROLA	1N5279B	1

NOTES.

SEE SHEET 2 FOR LATEST ISSUE

ISS												
ECO												
DATE												
CHKD												

DATE 2-5-78 DRAWN B.J. CHECKED M.L.M. APPROVED DATE

datron ELECTRONICS LTD

TITLE 1061/71/81 REAR P.C.B ASSY.

DRAWING NUMBER 400295 SHEET 3 OF 6

DESIGNATOR	DATRON PART No.	DESCRIPTION	PRINCIPAL MANUFACTURER	MANUFACTURER'S PART No.	No. USED Per Assy.
Q1	240018	300V N.P.N. TRANSISTOR	MOTOROLA	MJE 340	2
Q2	240018	" " "	"	"	—
M1	260068	5V 1½A REGULATOR	NATIONAL	LM309K/ALUM	1
M2	260024	POSITIVE VOLTAGE REGULATOR	FAIRCHILD	μA 78 MGUIC	1
M3	260023	NEGATIVE VOLTAGE REGULATOR	FAIRCHILD	μA 79 MGUIC	1
W1	209014	1A5 400V BRIDGE RECT	MICRO-ELECTRONICS	W004	1
W2	209003	100V. 1.5A BRIDGE RECT	MICRO-ELECTRONICS	W001	1
J1					
J2	620003	SOLDER PCB TERMINAL LUG	HARWIN	H2105A	5
J3	604033	4 WAY FLAT GOLD WAFER PIN	MOLEX	22-27-2041/GOLD	17
J4	604033	" " " " "	"	" " "	—
J5	604033	" " " " "	"	" " "	—

NOTES.

SEE SHEET 2 FOR LATEST ISSUE

ISS													
E.C.O.													
DATE													
CHKD													

DATE 2-5-78	datron ELECTRONICS LTD
DRAWN B.J.	TITLE 1061/71/81 REAR P.C.B. ASSY.
CHECKED MLM	
APPROVED	
DATE	DRAWING NUMBER 400295 — SHEET 4 OF 6

DESIGNATOR	DATRON PART No.	DESCRIPTION	PRINCIPAL MANUFACTURER	MANUFACTURER'S PART No.	No. USED Per Assy.
J6	604033	4 WAY FLAT GOLD WAFER PIN	MOLEX	22-27-2041/GOLD	—
J7	604033	" " " " "	"	"	—
J8					
J9	604033	4 WAY FLAT GOLD WAFER PIN	MOLEX	22-27-2041/GOLD	—
J10	604033	" " " " "	"	"	—
J11	604033	" " " " "	"	"	—
J12	604033	" " " " "	"	"	—
J13	604033	" " " " "	"	"	—
J14					
	410091-5A	PRINTED CIRCUIT BOARD			1
	450180-2	HEATSINK 5V	ADVANCE		1
	450183-1	HEATSINK 15V	ADVANCE		3
	540002	22SWG TIN CU WIRE			A/R
	512999	7/·2 PTFE WIRE WHITE		BSG210 TYPE C	A/R
	611037	SCREW M3x8mm. NYLON HEX. HD.	NYLON ALLOYS		8
	613005	WASHER M3 INT/SHAKEPROOF. ST.	GKN DISTRIBUTORS		4
	613017	WASHER M3 FLAT NYLON	NYLON ALLOYS		8
	615002	NUT. M3 FULL HEX STEEL	GKN	ZINC PLATED	4
	615008	NUT. M3 FULL HEX NYLON	GKN		2

NOTES.

SEE SHEET 2 FOR LATEST ISSUE

ISS													
E.C.O.													
DATE													
CHKD													

DATE 2-5-78	datron ELECTRONICS LTD
DRAWN B.J.	TITLE 1061/71/81 REAR P.C.B. ASSY
CHECKED MLM	
APPROVED	
DATE	DRAWING NUMBER 400295 — SHEET 5 OF 6

DESIGNATOR	DATRON PART No.	DESCRIPTION	PRINCIPAL MANUFACTURER	MANUFACTURER'S PART No.	No. USED Per Assy.
	611016	SCREW M3 x 8mm STEEL POZ PAN ZINC PL.	GKN		6
	618007	MELINEX WASHERS 12·7 x 16·5 x 0·05mm.	JERMYN.	J26-5001	2
	620007	TEST POINT TERMINAL	MICROVAR	C30	9
	618001	INSULATING BUSH	JERMYN	A1218	2
	618009	INSULATING PAD SIL TO3	WARTH	3223-07FR-06	1
	590004	SLEEVE - PTFE	HELLERMANN ELECTRIC	FE10	A/R.
	900004	SILICONE RUBBER COMPOUND	R.S.	554-119.	A/R
	420080-1	WARNING LABEL			2
	613029	M3 CRINKLE WASHER SS			2
	613009	4BA SOLDER TAG BRASS	TIN PL.		2
	590001	SLEEVE MAX. CABLE ø3·0	HELLERMANN ELECTRIC	H15x20mm BLACK HELSYN	3
	590006	HEATSHRINK SLEEVE ø2·4 INT	RS OR HELLERMANN ELECTRIC	399-495 OR LVR24	20mm
	630024	STEATITE BEAD 16 SWG	PARK ROYAL PORCELAIN	N° 2	2

NOTES.

SEE SHEET 2 FOR LATEST ISSUE

ISS												
E.C.O.												
DATE												
CHKD												

DATE 2-5-78	datron ELECTRONICS LTD
DRAWN B.J.	TITLE 1061/71/81 REAR P.C.B ASSY
CHECKED MM	
APPROVED	
DATE	DRAWING NUMBER 400295 SHEET 6 OF 6

DESIGNATOR	DATRON PART No.	DESCRIPTION	PRINCIPAL MANUFACTURER	MANUFACTURER'S PART No.	No. USED Per Assy.
J2	572115/C	16 WAY RIBBON CABLE ASSY	DATRON.		1
J3	604035	ACCT. RIGHT ANGLED WAFER. GOLD	MOLEX	22-12-2041	5
J4	604035	" " " "	"	"	—
J6	604035	" " " "	"	"	—
	410092-5A	P.C.B.			1
J1 & J5	604036	STRIP OF 10 AMP PINS	AMP	163740-8	4
	630023	SCOTCHFLEX ADHESIVE CLIP	3M	CLIP 706	1
	630099	25mm MASKING TAPE	3M	SCOTCH N 230	A/R
	620007	TEST POINT TERMINAL	MICROVAR	C 30	2
R1	000473	47K 5% ¼W CARBON	MULLARD	CR25	2
R2	000473	47K " " "	"	"	—
D1	200002	Si RECTIFIER 1A 50V	FAIRCHILD	IN4001	2
D2	200002	" " " "	"	"	—

NOTES: CIRCUIT DIAGRAM . 430296
CHECK PROC . 460296
CHECK LIST . 470296.

C	D	1	2	3	4	5	6	7	8
—	—	RELEASED	ECO 784	ECO 849	BG7/004	992	1000	1102	1217
—	—	25-8-78	28-9-78	6-12-78	4-5-79	11-6-79	25-10-79	18.1.80	14.4.80
—	—	MD	MD	MD	MD	MD	MD	MD	MD

2-5-78 B.J. DG

datron ELECTRONICS LTD

1061/71/81
CENTRE P.C.B ASSY

DRAWING NUMBER 400296 SHEET 2 2

DESIGNATOR	DATRON PART No.	DESCRIPTION	PRINCIPAL MANUFACTURER	MANUFACTURER'S PART No.	No. USED Per Assy.
J2	604035	RIGHT ANGLED WAFER PIN. GOLD.	MOLEX	22-12-2041	12
J3	604035	" " " " "	"	"	—
J4	604035	" " " " "	"	"	—
J5	604035	" " " " "	"	"	—
J6	604035	" " " " "	"	"	—
	410093-A	PRINTED CIRCUIT BOARD			1
	510111	7/0.2 BROWN WIRE			120mm
J1 & J7	604036	STRIP OF 10 AMP PINS	AMP	163740-8	2
	605053	12 WAY POLARISED SOCKET	MOLEX	22-01-2125	2
	605057	GOLD CRIMP PINS	MOLEX	4809-GL	7
	606004	PLASTIC POLARISING PEG	MOLEX	4161-1	4
	540002	22 S.W.G. TIN CU WIRE			A/R
	590001	SLEEVE MAX CABLE Ø3.0	HELLERMANN ELECTRIC	H15 x 20mm BLK HELSYN	1

NOTES: CIRCUIT DIAGRAM . 430297.
CHECK PROC . 460297.
CHECK LIST . 470297.

SEE SHEET 2 FOR DATES OF ISSUE

C	D	1	2
—	—	RELEASED	BG7
—	24-8-78	29-9-78	11-6-79
—	MD		MD

DATE 28-4-78
DRAWN B.J.
CHECKED DG
APPROVED
DATE

datron ELECTRONICS LTD

TITLE 1061/71/81
L.H. PCB ASSEMBLY

DRAWING NUMBER 400297 SHEET 2 = 2

DESIGNATOR	DATRON PART NO.	DESCRIPTION	PRINCIPAL MANUFACT. REF.	MANUFACT. REF. PART NO.	
R1	000334	330K 5% 1/4W CARBON	MULLARD	CR25	2
R2	000334	" "	"		—
	410094-4A	P.C.B.			1
	540002	22SWG TIN CU WIRE			A/R
J2	574270/C	24WAY RIBBON CABLE ASSY	DATRON		
J1 & J3	604036	STRIP OF 10AMP PINS	AMP	163740-8	4
	590001	SLEEVE MAX CABLE Ø 3·0	HELLERMANN ELECTRIC	H15x20mm BLK HELSYN	2
	630099	25mm MASKING TAPE	3M	SCOTCH N 230	A/R

NOTES: CIRCUIT DIAGRAM . 430298
CHECK PROC . 460298
CHECK LIST . 470298

	C	D	1	2	3	4	5	6
	-	-	RELEASED	ECO850	80	943		1474
		24-8-78	29-9-78	4-5-79	11-6-79	10-9-79	[illegible]	3 6 83
		MD		MD	MD	MD	MD	

28-4-78
B.J.
D.J.

datron
1061/71/81
R.H. PCB ASSEMBLY
400298

DESIGNATOR	DATRON PART No.	DESCRIPTION	PRINCIPAL MANUFACTURER	MANUFACTURER'S PART No.	No. USED Per Assy
R1	000333	33K 5% ¼W CARBON	MULLARD	CR25	2
R2	000824	820K 5% ¼W CARBON	MULLARD	CR25	1
R3	000223	22K 5% ¼W CARBON	MULLARD	CR25	2
R4	000222	2K2 5% ¼W CARBON	MULLARD	CR25	3
R5	000104	100K 5% ¼W CARBON	MULLARD	CR25	3
R6	000104	100K 5% ¼W CARBON	MULLARD	CR25	–
R7	000104	100K 5% ¼W CARBON	MULLARD	CR25	–
R8	000102	1K 5% ¼W CARBON	MULLARD	CR25	2
R9	000105	1M 5% ¼W CARBON	MULLARD	CR25	3
R10	000105	1M 5% ¼W CARBON	MULLARD	CR25	–
R11	000105	1M 5% ¼W CARBON	MULLARD	CR25	–
R12	000103	10K 5% ¼W CARBON	MULLARD	CR25	5
R13	000103	10K 5% ¼W CARBON	MULLARD	CR25	–
R14	000103	10K 5% ¼W CARBON	MULLARD	CR25	–
R15	000222	2K2 5% ¼W CARBON	MULLARD	CR25	–
R16	000223	22K 5% ¼W CARBON	MULLARD	CR25	–
R17	000103	10K 5% ¼W CARBON	MULLARD	CR25	–
R18	015112	51K1 1% ⅛W M.F.	WELWYN	4033C	1
R19	070123	900R 0.1% 5 ppm/°C W.W.	MANN (KELVIN)	MX 125-B (EP-01)	1
R20	070124	90R 0.1% 5 ppm/°C W.W.	MANN	MX 125-B	1
R21	070125	9R 0.1% 5 ppm/°C W.W.	MANN	AX 175 BT	1
R22	070126	1R 0.1% 5 ppm/°C W.W.	MANN	LR500BU	1
R23	000222	2K2 5% ¼W CARBON	MULLARD	CR25	–

ISSUE	A	B	C	1c	2	3	4	5	6	7	8	9	10	11
ECO					972, 987	[illegible]	1048	1087, 1099, 1110	1116	1189	1180	1217	1257	1529
DATE	17 JULY 79	21 AUG 79	24.9.79	24.9.79	25-10-79	4-1-80	16.1.80	14.4.80	3.6.80	17.12.80	26.2.81	18.8.81	24.11.81	16.9.83
CHKD	[signature]	MD	MD	MD	MD	MD	MD	MD	MD	MD	MD	MD	MD	MD

Date: 17 JULY 79 | Drawn: W.G. SMITH | datron ELECTRONICS LTD | Title: CURRENT P.C.B. | Drawing number: 400304 | Sheet 2 of 7

DESIGNATOR		DATRON PART No.	DESCRIPTION	PRINCIPAL MANUFACTURER	MANUFACTURER'S PART No.	No. USED Per Assy
R24		000102	1K 5% ¼W CARBON	MULLARD	CR25	–
R25		070127	0R1 0.1% 5ppm/°C W.W.	MANN	LR500BU	1
R26		000333	33K 5% ¼W CARBON	MULLARD	CR25	–
R27	●	000221	220R 5% ¼W CARBON	MULLARD	CR25	2
R28	●	000221	220R 5% ¼W CARBON	MULLARD	CR25	–
R29		000103	10K 5% ¼W CARBON	MULLARD	CR25	–
C1		150020	10µF 25V TANT	UNION CARBIDE	K10E25	2
C2		150020	10µF 25V TANT	UNION CARBIDE	K10E25	–
C3		101103	10nF 250V CER DISC	ERIE	801	1
C4		150014	680nF 35V 20% TANT	UNION CARBIDE	KR68E35	1
C5		150016	1µF 35V TANT	UNION CARBIDE	K1R0E35	2
C6		150016	1µF 35V TANT	UNION CARBIDE	K1R0E35	–
C7	*	102471	470pF 10% 500V CER DISC	ITT	CD10	1
	+	102331	330pF 10% 500V CER DISC	ITT	CD10	
C8		102101	100pF 10% 500V CER DISC	ITT	CD10	1
C9		110013	100nF 20% POLYESTER	MULLARD	C280AEP100K	1

NOTES: * VALUE CORRECT IF R19 MANUFACTURED BY MANN - TYPE MX125-B
+ VALUE CORRECT IF R19 MANUFACTURED BY KELVIN - TYPE EP-01
● R27 + 28 NOT USED WITH RL1, RL2 ALTERNATIVE

SEE SHEET 2 FOR LATEST ISSUE

ISS													
ECO													
DATE													
CHKD													

Date: 17 JULY 79 | Drawn: W.G. SMITH | Checked: | Approved: | datron ELECTRONICS LTD | Title: CURRENT P.C.B. | Drawing number: 400304 | Sheet 3 of 7

J.W. 1164

DESIGNATOR	DATRON PART No.	DESCRIPTION	PRINCIPAL MANUFACTURER	MANUFACTURER'S PART No.	No. USED Per Assy.
D1	200001	75mA. 75V. G.P. Si DIODE.	FAIRCHILD.	IN4148.	5
D2	200008	200mA. 125V. L.L. Si DIODE.	FAIRCHILD.	IN458A.	3
D3	200008	200mA. 125V. L.L. Si DIODE.	FAIRCHILD.	IN458A.	–
D4	200008	200mA. 125V. L.L. Si DIODE.	FAIRCHILD.	IN458A.	–
D5	200001	75mA. 75V. G.P. Si DIODE.	FAIRCHILD.	IN4148	–
D6	200001	75mA. 75V. G.P. Si DIODE.	FAIRCHILD.	IN4148	–
D7	200001	75mA. 75V. G.P. Si DIODE.	FAIRCHILD.	IN4148	–
D8	200001	75mA. 75V. G.P. Si DIODE.	FAIRCHILD.	IN4148	–
D9		NOT USED			
D10		NOT USED			
D11	220020	FET DIODE 100pA IR.	TELEDYNE.	PAD100	2
D12	220020	FET DIODE 100pA IR.	TELEDYNE.	PAD100	–
D13	200022	3A. 400V. G.P. Si DIODE.	MOTOROLA	BY252	4
D14	200022	3A. 400V. G.P. Si DIODE.	MOTOROLA	BY252	–
D15	200022	3A. 400V. G.P. Si DIODE.	MOTOROLA	BY252	–
D16	200022	3A. 400V. G.P. Si DIODE.	MOTOROLA	BY252	–

NOTES

SEE SHEET 2 FOR LATEST ISSUE

DATE 17 JULY 79 | DRAWN W.G. SMITH | CHECKED | APPROVED | DATE

datron ELECTRONICS LTD

TITLE CURRENT P.C.B

DRAWING NUMBER 400304 | SHEET 4 OF 7

DESIGNATOR	DATRON PART No.	DESCRIPTION	PRINCIPAL MANUFACTURER	MANUFACTURER'S PART No.	No. USED Per Assy.
Q1		NOT USED			
Q2	250001	Si P.N.P. TRANSISTOR.	NATIONAL.	BC214/ TO18	2
Q3		NOT USED			
Q4	250001	Si P.N.P. TRANSISTOR.	NATIONAL.	BC214/ TO18	–
Q5		NOT USED			
Q6		NOT USED			
Q7	230003	N-CHAN J FET.	TELEDYNE.	U1899 JF	1
Q8	230035	N-CHAN J FET.	TELEDYNE.	U1897 JF	2
Q9	230002	N-CHAN J FET.	TELEDYNE.	U1994 JF	1
Q10	230035	N-CHAN J FET.	TELEDYNE.	U1897 JF	–
M1	280015	QUAD D-TYPE LATCH	MOTOROLA	MC14076 BCP	2
M2	280011	DUAL D FLIP FLOP	MOTOROLA	MC14013 BCP	1
M3	280015	QUAD D-TYPE LATCH	MOTOROLA	MC14076 BCP	–
M4	270059	7× DARLINGTON DRIVER	SPRAGUE/ EXAR	ULN2004A/ XR2204CP	1
M5	260027	714 OP AMP	FAIRCHILD	μA 714HC.	1

NOTES

SEE SHEET 2 FOR LATEST ISSUE

ISS. | ECO. | DATE | CHKD

DATE 17 JULY 79 | DRAWN W.G. SMITH | CHECKED | APPROVED | DATE

datron ELECTRONICS LTD

TITLE CURRENT P.C.B

DRAWING NUMBER 400304 | SHEET 5 OF 7

W 1164

DESIGNATOR	DATRON PART No.	DESCRIPTION	PRINCIPAL MANUFACTURER	MANUFACTURER'S PART No.	No. USED Per Assy.
AN1		NOT USED			
RL1 *	330017	RELAY REED LOW THERMAL.	OMRON	G2E 182PH	2
RL2 *	330017	RELAY REED LOW THERMAL.	OMRON	G2E 182PH	-
RL3	330019	RELAY 4P2W 7v HOLD-IN	P&B	SEE DRAWING	1
RL4	330018	RELAY 2P2W 7v HOLD-IN	P&B	SEE DRAWING	1
	400379/1	MOLEX TERMINAL/WIRE ASSY	DATRON		1
	410104-5A	PRINTED CIRCUIT BOARD			1
	459112	RELAY BRACKET			2
	540008	7/·2 PTFE INSULATED WHITE WIRE		TYPEC	807mm TOTAL
	620007	TEST POINT TERMINAL	MICROVAR	C30	5
	590001	SLEEVE BLACK	HELLERMAN ELECTRIC	H15x20mm HELYSYN	16
	605056	CRIMP TERMINAL	MOLEX	4809-TL	3
J1	571095/C	16 WAY AP/3M RIBBON CABLE	DATRON		1
	605060	14 WAY D.I.L. SOCKET	ASTRALUX OR JERMYN	ICL-143-S3T	1
	605061	16 WAY D.I.L. SOCKET	ASTRALUX OR JERMYN	ICL-163-S6T	3
	605051	4 WAY POLARISED SOCKET	MOLEX	(22-01-2045) 6471-4-1	1
J3	605052	8 WAY POLARISED SOCKET	MOLEX	(22-01-2085) 6471-8-1	1
J2	605053	12 WAY POLARISED SOCKET	MOLEX	(22-0-2125) 6471-12-1	1
	605057	CRIMP TERMINAL	MOLEX	4809-GL	8

* ALTERNATIVE 330014 OR 330013

17 JULY 79 — datron ELECTRONICS LTD

DRAWN W.G. SMITH — TITLE CURRENT P.C.B.

DRAWING NUMBER 400304 — SHEET 6 OF 7

DESIGNATOR	DATRON PART No.	DESCRIPTION	PRINCIPAL MANUFACTURER	MANUFACTURER'S PART No.	No. USED Per Assy.
	611004	SCREW M3x6 POSI PAN			2
	613005	WASHER M3 INT/SHAKEPROOF			2
	615002	NUT M3 FULL HEX			2
	615005	NUT 3-48 UNC FULL HEX			2
	613014	WASHER M2·5 INT SHAKEPROOF			2
	617010	NYLATCH PLUNGER	C.J. FOX & SON	HN3P-32-4-1	4
	617011	NYLATCH GROMMET	C.J. FOX & SON	HN3G	4
	620003	SOLDER P.C.B TERMINAL LUG	HARWIN	H2105A	13
	630024	STANDARD STEATITE INSUL. BEAD	PARK ROYAL PORCELAIN CO.	TYPE No 2 (16SWG.)	24
	920082	FUSE HOLDER 20mm P/MTG	BELLING & LEE	L2002	1
	920071	FUSE 1·6A QUICK ACTING 20mm	BESWICK	S501-1·6-F-250V	1
	590004	SLEEVE - PTFE	HELLERMANN ELECTRIC	FE10	A/R
	590055	SLEEVE Ø1·0 SIL. RUBBER	" "	H15 CONT. BLACK	30mm

NOTES

SEE SHEET 2 FOR LATEST ISSUE

ISS												
ECO												
DATE												
CHKD												

DATE 17 JULY 79 — datron ELECTRONICS LTD

DRAWN W.G. SMITH — TITLE CURRENT P.C.B.

CHECKED

APPROVED

DATE

DRAWING NUMBER 400304 — SHEET 7 OF 7

J.W. 1164

DESIGNATOR	DATRON PART No	DESCRIPTION	PRINCIPAL MANUFACTURER	MANUFACTURER'S PART No	No. USED Per Assy
R1	000123	12K 5% 1/4W CARBON	MULLARD	CR25	3
R2	000332	3K3 " " "	"	"	6
R3	000332	3K3 " " "	"	"	-
R4	000103	10K " " "	"	"	6
R5	000123	12K " " "	"	"	-
R6	000222	2K2 " " "	"	"	2
R7	000222	2K2 " " "	"	"	-
R8	000123	12K " " "	"	"	-
R9	000333	33K " " "	"	"	1
R10	000562	5K6 " " "	"	"	1
R11	000103	10K " " "	"	"	-
R12	000105	1M " " "	"	"	1
R13	000332	3k3 " " "	"	"	-
R14	000103	10k " " "	"	"	-
R15	000332	3k3 " " "	"	"	-
R16	000332	3k3 " " "	"	"	-
R17	000681	680R " " "	"	"	2
R18	000681	680R " " "	"	"	-
R19	000332	3k3 " " "	"	"	-
R20	000103	10k " " "	"	"	-
R21	000103	10K " " "	"	"	-
R22	000103	10K " " "	"	"	-

1	2	3	4	5	6	7	8	9
RELEASED	902/887	972	981	1021 1054	1085	1166	1199	1329
26-3-79	15-6-79	25-10-79	6-11-79	2-1-80	22.4.80	24.9.80	24.2.81	8-7-82
MD	MD	MD	MD	MD	MD	MD	MD	MD

5-3-79 BJ MD

datron ELECTRONICS LTD

REAR INPUT / RATIO ASSY.

DRAWING NUMBER 400307 SHEET 3 OF 8

DESIGNATOR	DATRON PART No	DESCRIPTION	PRINCIPAL MANUFACTURER	MANUFACTURER'S PART No	No. USED Per Assy
C1	150022	2µ2F 20% 35V DIP. TANT	UNION CARBIDE	K2R2E35	2
C2	150022	2µ2F 20% 35v DIP. TANT	UNION CARBIDE	K2R2E35	-
C3	150020	10µF 20% 25v DIP. TANT	UNION CARBIDE	K10E25	2
C4	150020	10µF 20% 25V DIP. TANT	UNION CARBIDE	K10E25	-
C5	102101	100pF 10% 500V CER DISC	ITT	CD10	1
C6	110013	100nF 20% 250v POLYESTER	MULLARD	C280AEP100K	1
C7	150014	680nF 20% 35V DIP. TANT	UNION CARBIDE	KR68E35	2
C8	150014	680nF 20% 35V DIP. TANT	UNION CARBIDE	KR68E35	-

NOTES

SEE SHEET 2 FOR LATEST ISSUE

ISS														
ECO														
DATE														
CHKD														

DATE 23.9.80

DRAWN

CHECKED

APPROVED

DATE

datron ELECTRONICS LTD

TITLE REAR INPUT/RATIO 1061/1071

DRAWING NUMBER 400307 SHEET 4 OF 8

JW 1164

DESIGNATOR	DATRON PART No	DESCRIPTION	PRINCIPAL MANUFACTURER	MANUFACTURER'S PART No	No. USED Per Assy.
D1	200001	75mA 75V GP. Si DIODE	FAIRCHILD	IN4148	8
D2	200001	" " " " "	"	"	—
D3	200001	" " " " "	"	"	—
D4	200001	" " " " "	"	"	—
D5	200001	" " " " "	"	"	—
D6	200001	" " " " "	"	"	—
D7	200001	" " " " "	"	"	—
D8	200001	" " " " "	"	"	—
Q1	240001	Si NPN TRANSISTOR	NATIONAL	BC184 / TO18	4
Q2	240001	" " "	"	"	—
Q3	250001	Si PNP TRANSISTOR	NATIONAL	BC214 / TO18	2
Q4	250001	" " "	"	"	—
Q5	240001	Si NPN TRANSISTOR	NATIONAL	BC184 / TO18	—
Q6	240001	" " "	"	"	—
M1	280011	DUAL D FLIP-FLOP	MOTOROLA	MC14013 BCP	1
J1	604036	CON. PIN STRIP OF 10. HORIZ. TYPE.	AMP	163740-8	2
J2, J3	605052	8 WAY POLARISED SOCKET	MOLEX	(22-01-2085) 6471-8-1	2

NOTES

SEE SHEET 3

5-3-79
B.J.
MD

datron

REAR INPUT / RATIO ASSY.

400307 5 8

DESIGNATOR	DATRON PART No	DESCRIPTION	PRINCIPAL MANUFACTURER	MANUFACTURER'S PART No	No. USED Per Assy.
J4 & J6	604033	FLAT WAFER PIN (4WAY GOLD)	MOLEX	22-27-2041 / GOLD	3
J5	605051	4 WAY POLARISED SOCKET	MOLEX	22-01-2045	1
	400379/4	WIRE/TERMINAL ASSY.	HOLDEN CORDS		6
	400379/5	" " "	" "		4
RL1 & RL4.	330018	RELAY 2P2W 7v HOLD-IN	P&B	SEE DRAWING	2
RL2 & RL3.	330019	RELAY 4P2W 7v HOLD-IN	P&B	SEE DRAWING	2
	410106-[illegible]	COMPONENT PCB.			1
	410132-[illegible]	RELAY PCB.			1
	450185-[illegible]	SOCKET PLATE			1
	450241-[illegible]	RELAY BRACKET			1
	540002	22SWG TINNED COPPER WIRE			A/R
	540008	7/2 PTFE INS. WHITE WIRE			140mm

NOTES.

SEE SHEET 3 FOR LATEST ISSUE

ISS			
ECO			
DATE			
CHKD			

DATE 5-3-79
DRAWN B.J.
CHECKED MD
APPROVED
DATE

datron ELECTRONICS LTD

TITLE REAR INPUT / RATIO ASSY

DRAWING NUMBER 400307

SHEET 6 OF 8

LW. 1164

DESIGNATOR	DATRON PART No.	DESCRIPTION	PRINCIPAL MANUFACTURER	MANUFACTURER'S PART No	No. USED Per Assy
	590001	SLEEVE MAX CABLE ϕ 3·0mm	HELLERMANN ELECTRIC.	H15 x 20mm BLK HELSYN.	23
	590004.	SLEEVE - PTFE	" "	FE10	A/R
	602007	RELAY SOCKET 2POLE PCB MOUNT	POTTER & BRUMFIELD	27E212	1
	602009	RELAY SOCKET 4POLE PCB MOUNT.	" "	27E213	1
J10, J11	604008	7 WAY PLUG PANEL MOUNT	PYE CONNECTORS	M7P	2
	605009	7 WAY SOCKET	PYE CONNECTOR	M7S	2
	605060	14 WAY DIL SOCKET	ASTRALUX OR JERMYN	ICN-246-S4T OR A23-2023Y	1
	605057	CRIMP TERMINAL	MOLEX	4809-GL	2
	606001	LOCKING HOOD	PYE CONNECTORS.	MHN	2
	606002	NUT	PYE CONNECTORS.	MN	2
	606003	WASHER	" "	MLW	2
	611004	SCREW M3 x 6mm STEEL POZI-PAN. ZINC PLATED	GKN.		7
	611007	SCREW M3 x 6mm STEEL POZI-CSK. ZINC PLATED	GKN.		7
	611016	" M3 x 8mm " " PAN " " "			4
	612020	STANDOFF NYLON M3 x 19 TRANSIPILLAR.	W.K. ELECTRONICS	TPI/6·5/19/M3/I/I	5

NOTES

SEE SHEET 3 FOR LATEST ISSUE

5-3-79
DRAWN B.J.
CHECKED MD
APPROVED
DATE

datron ELECTRONICS LTD

TITLE REAR INPUT / RATIO ASSY

DRAWING NUMBER 400307 7 8

DESIGNATOR	DATRON PART No	DESCRIPTION	PRINCIPAL MANUFACTURER	MANUFACTURER'S PART No	No. USED Per Assy
	613005	WASHER M3 INT/SHAKEPROOF ST.	GKN DISTRIBUTORS	ZINC PLATED	13
	615001	NUT 8BA FULL HEX STEEL		ZINC PLATED	2
	615002	" M3 " " "		" "	2
	630005	CLIP FOR P&B R10 2POLE RELAY.	POTTER & BRUMFIELD	20C249	1
	630028	CLIP FOR P&B R10 4POLE RELAY	" "	20C250	1
	700069.	DPDT SLIDE SWITCH	WAVCOM	S-5022CD03-0 + 3/4" TRIGGER & STYLE 2/C PCB MOUNT, CONTACTS.	1

NOTES

SEE SHEET 3 FOR LATEST ISSUE

ISS												
ECO												
DATE												
CHKD												

DATE 5-3-79
DRAWN B.J.
CHECKED MD
APPROVED
DATE

datron ELECTRONICS LTD

TITLE REAR INPUT / RATIO ASSY

DRAWING NUMBER 400307 SHEET 8 OF 8

J W 1164

DESIGNATOR	DATRON PART No.	DESCRIPTION	PRINCIPAL MANUFACTURER	MANUFACTURER'S PART No.	No. USED Per Assy.
R1	000102	1KΩ 5% ¼W CARBON	MULLARD	CR25	1
R2	000682	6K8 " " "	"	"	1
R3	090001	PTC THERMISTOR	MULLARD	VA8650	2
R4	090001	" "	"	"	–
R5	066102	1KΩ ⅜ SQ VERTICAL POT	BECKMAN	72XW	1
R6	000104	100K 5% ¼W CARBON	MULLARD	CR25	1
R7	070128	21K51 0·1% WIRE WOUND	MANN	MX 125	1
R8	070066	10K 0·1% WIRE WOUND	MANN	MX 125	1
C1	101103	0·01μF 250V CER DISC	ITT	CD10K3N00JS 5550SC	2
C2	101103	0·01μF " " "	"	"	–
C3 *	102330	33pF 500V CER DISC	ITT	CD10PG33P0JS 5550SC	1 *
C4	102330	33pF " " "	"	"	1
C5	110013	0·1μF 20% 250V POLYESTER	MULLARD	C280AE/P100K	1

NOTES * ONLY REQUIRED WHEN M1 ALTERNATIVE (TYPE 101) IS USED.
CCT DIAG. 430308
CHECK PROC 430308. CHECK LIST 470308
SEE SHEET 2 FOR LATEST ISSUE

ISS	1	2	3
E.C.O.	RELEASED	907	945
DATE	27.12.78	20.6.79	10.9.79
CHKD	MD	MD	BJ

DATE	22-11-78
DRAWN	B.J.
CHECKED	MD
APPROVED	
DATE	

datron ELECTRONICS LTD

TITLE: ANALOGUE OUTPUT PCB ASSY.

DRAWING NUMBER: 400308 SHEET 2 OF 4

DESIGNATOR	DATRON PART No.	DESCRIPTION	PRINCIPAL MANUFACTURER	MANUFACTURER'S PART No.	No. USED Per Assy.
D1	213001	10V 5W ZENER	MOTOROLA	1N5347	2
D2	213001	10V " "	"	"	–
M1 *	260002	OP AMP	FAIRCHILD	μA741C	1 *
M2	260026	OP AMP	NATIONAL	LM212H	1
	400379/4	WIRE / TERMINAL ASSY	HOLDEN CORDS.		5
	410107-3	P.C.B.			1
	450186-1	SOCKET PLATE.			1
	510600	7/·2 PVC INSUL (BLACK) WIRE			50mm
	510222	7/·2 PVC INSUL (RED) WIRE			50mm
	590001	SLEEVE MAX CABLE ϕ 3·0	HELLERMANN ELECTRIC	H15x20mm BLACK HELSW	2
	605007	5 WAY SOCKET	PYE CONNECTORS	M55	1
V1	605052	8 WAY POLARISED SOCKET	MOLEX	(22-01-2085) 6471-8-1	1

NOTES * M1 ALTERNATIVE 260025 (LM101).

SEE SHEET 2 FOR LATEST ISSUE

ISS												
E.C.O.												
DATE												
CHKD												

DATE	22-11-78
DRAWN	B.J.
CHECKED	
APPROVED	
DATE	

datron ELECTRONICS LTD

TITLE: ANALOGUE OUTPUT PCB ASSY

DRAWING NUMBER: 400308 SHEET 3 OF 4

DESIGNATOR	DATRON PART No.	DESCRIPTION	PRINCIPAL MANUFACTURER	MANUFACTURER'S PART No.	No. USED Per Assy.
	606001	LOCKING HOOD	PYE CONNECTORS	MHN	1
	606002	NUT	" "	MN	1
	606003	WASHER	" "	MLW	1
	612019	STANDOFF LOCKING TYPE 7/8" NYLON:	RICHCO	LCBS-14R	4
	620003	SOLDER PCB TERMINAL LUG	HARWIN	H2105A	2
	630024	INSULATING BEADS STEATITE		(TYPE N°2)	8
	620007	TEST POINT TERMINAL	MICROVAR	C30	5
*	604003	5 WAY PLUG	PYE CONNECTORS	MSP.	1.
*	611016	SCREW POZI-PAN M3×8			4
*	613005	SHAKEPROOF WASHER M3			4

NOTES * FITTED AT FINAL ASSEMBLY.

SEE SHEET 2 FOR LATEST ISSUE

ISS.												
E.C.O.												
DATE												
DRWN												

DATE 28-11-78
DRAWN B.V.
CHECKED
APPROVED
DATE

datron ELECTRONICS LTD

TITLE ANALOGUE OUTPUT P.C.B ASSY.

DRAWING NUMBER 400308

SHEET 4 OF 4

DESIGNATOR	DATRON PART No	DESCRIPTION	PRINCIPAL MANUFACTURER	MANUFACTURER'S PART No	No. USED Per Assy
R1	000104	100K 5% ¼W CARBON	MULLARD	CR25	15
R2	000101	100R " " "	"	"	4
R3	000101	100R " " "	"	"	-
R4	000105	1M 10% " "	"	"	11
R5	000822	8K2 " " "	MULLARD	CR25	3
R6	011302	13KO 1% 50ppm MF	HOLCO	HBC	2
R7	011302	13KO " " "	"	"	-
R8	000101	100R 5% ¼W CARBON	MULLARD	CR25	-
R9		NOT USED			
R10	000101	100R 5% ¼W CARBON	"	"	-
R11		FSV		CR25	-
R12	000472	4k7 " " "	"	"	12
R13	000104	100k " " "	"	"	-
R14	000472	4k7 " " "	"	"	-
R15		FSV		CR25	-
R16	050038	6K24 1% 15ppm MF	ACI	EE-0-100-C4	2
R17	050037	4K75 1% 15ppm MF	ACI	EE-0-100-C4	2
R18		PART OF KIT WITH D59			
R19		PART OF KIT WITH D60			
R20	063203	20K POT CERMET	BECKMAN	72P	1
R21	000104	100K 5% ¼W CARBON	MULLARD	CR25	-
R22	000102	1K " " "	"	"	8
R23	063504	500K POT CERMET	BECKMAN	72P	2

NOTES. CIRCUIT DIAGRAM = 430328
CHECK PROCEDURE = 460328
CHECK LIST = 470328
SEE SHEET 2 FOR LATEST ISSUE

	18	19	20	21	22	23	24
	1244 1248	245,73	282	1460	1512	X445/1649	1659
	2 11 81	4 1-82	23 2-82	25.5.83	17-8-83	12-684	9 9 84
	MD	MD	MD	MD	MD	MD	MD

	10	11	12	13	14	15	16	17
ISS								
ECO	1000		1001	1098. 1107	1128. 1150. 1117	1144 1168 1114	1182 1134 1188 1191 1190 1193 1192	1217
DATE	29-10-79	13.1.80	27.2.80	15.4.80	2.6.80	23.9.80	5.1.81	8.8.81
CHKD	MD	MD	MD					MD

DATE	12-7-78
DRAWN	B.J
CHECKED	
APPROVED	
DATE	

datron ELECTRONICS LTD

TITLE: 1061 ANALOGUE PCB ASSEMBLY.

DRAWING NUMBER: 400328 SHEET 2 OF 24

DESIGNATOR	DATRON PART No	DESCRIPTION	PRINCIPAL MANUFACTURER	MANUFACTURER'S PART No	No. USED Per Assy
R24	000824	820K 5% ¼W CARBON	MULLARD	CR25	2
R25	000122	1K2 5% ¼W CARBON	MULLARD	CR25	1
R26	000185	1M8 10% ¼W CARBON	"	"	1
R27	000275	2M7 5% ¼W CARBON	"	"	3
R28	000222	2K2 5% ¼W CARBON	"	"	7
R29	000100	10R "	"	"	8
R30	000100	10R "	"	"	-
R31	000473	47K "	"	"	3
R32	000393	39K "	"	"	1
R33	000473	47K "	"	"	-
R34	000102	1K "	"	"	-
R35	000104	100k " " "	"	"	-
R36	000104	100k " " "	"	"	-
R37	000562	5K6 " " "	"	"	3
R38	050034	825R 1% 15ppm MF	ACI	EE0-100 C4	2
R39	050053	64R2 1% 1/10W 15ppm MF	"	EE-0-10-64R2-F-C4	2
R40	050053	64R2 1% 1/10W 15ppm MF	"	EE-0-10-64R2-F-C4	-
R41		NOT USED			-
R42	050031	196R 1% 15ppm MF	ACI	EE 0-100 C4	2
R43	019768	97R6 1% 50ppm MF	HOLCO	HBC	2
R44		NOT USED			
R45		NOT USED			
R46	000182	1K8 5% ¼W CARBON	MULLARD	CR25	1

NOTES.

SEE SHEET 2 FOR LATEST ISSUE

ISS													
ECO													
DATE													
CHKD													

DATE	12-7-78
DRAWN	B.J
CHECKED	
APPROVED	
DATE	

datron ELECTRONICS LTD

TITLE: 1061 ANALOGUE PCB ASSEMBLY

DRAWING NUMBER: 400328 SHEET 3 OF 24

DESIGNATOR	DATRON PART No.	DESCRIPTION	PRINCIPAL MANUFACTURER	MANUFACTURER'S PART No.	No. USED Per Assy.
R47	000100	10R 5% 1/4W CARBON	MULLARD	CR25	–
R48	000103	10K	"	"	12
R49	000103	10K	"	"	–
R50	000103	10K	"	"	–
R51	000100	10R	"	"	–
R52	000334	330K	"	"	4
R53	000334	330K	"	"	–
R54	000334	330K	"	"	–
R55	000334	330K	"	"	–
R56	000104	100K	"	"	–
R57	000221	220R	"	"	3
R58	000821	820R	"	"	1
R59	000563	56K	"	"	6
R60	000222	2K2	"	"	–
R61	000105	1M0 10% 1/4W CARBON	"	"	–
R62	000105	1M0 " " "	"	"	–
R63	000221	220R 5% 1/4W CARBON	"	"	–
R64		NOT USED			
R65	000102	1K 5% 1/4W CARBON	"	"	–
R66	000183	18K	"	"	1
R67	000562	5K6	"	"	–
R68	018060	806R 1% 50ppm MF	HOLCO	H8	2
R69	000114	110K 5% 1/4W CARBON	MULLARD	CR25	2

NOTES.

SEE SHEET 2 FOR LATEST ISSUE

ISS													
E.C.O.													
DATE													
CHKD													

DATE 12-7-78	datron ELECTRONICS LTD
DRAWN BJ	TITLE 1061 ANALOGUE PCB ASSEMBLY.
CHECKED	
APPROVED	
DATE	DRAWING NUMBER 400328 — SHEET 4 OF 24

DESIGNATOR	DATRON PART No.	DESCRIPTION	PRINCIPAL MANUFACTURER	MANUFACTURER'S PART No.	No. USED Per Assy.
R70	018060	806R 1% 50ppm MF	HOLCO	H8	–
R71	070115	12K0 1% 10ppm WW	MANN	MX125	2
R72	000472	4K7 5% 1/4W CARBON	MULLARD	CR25	–
R73	000103	10K " " "	"	"	–
R74	000275	2M7 " " "	"	"	–
R75	000565	5M6 " " "	"	"	1
R76	000106	10M 10% 1/4W CARBON	"	"	2
R77	000226	22M " " "	ALLEN BRADLEY	CB2261	1
R78	000473	47K 5% 1/4W CARBON	MULLARD	CR25	–
R79	000392	3K9 " " "	"	"	2
R80	000104	100K " " "	"	"	–
R81	000472	4K7 " " "	"	"	–
R82	000472	4K7 " " "	"	"	–
R83	000472	4K7 " " "	"	"	–
R84	011378	13R7 1% 1/8W MF	HOLCO	H8	1
R85		NOT USED			
R86	000472	4K7 5% 1/4W CARBON	MULLARD	CR25	–
R87	000114	110K " " "	"	"	–
R88		NOT USED			–
R89	050031	196R 1% ppm MF	ACI	EE 0·100-C4	–
R90	019768	97R6 1% 50ppm MF	HOLCO	H8C	–
R91		NOT USED			
R92		NOT USED			

NOTES

SEE SHEET 2 FOR LATEST ISSUE

ISS													
E.C.O.													
DATE													
CHKD													

DATE 12-7-78	datron ELECTRONICS LTD
DRAWN BJ	TITLE 1061 ANALOGUE PCB ASSEMBLY.
CHECKED	
APPROVED	
DATE	DRAWING NUMBER 400328 — SHEET 5 OF 24

DESIGNATOR	DATRON PART No.	DESCRIPTION	PRINCIPAL MANUFACTURER	MANUFACTURER'S PART No.	No. USED Per Assy.
R93	000124	120K 5% 1/4W CARBON	MULLARD	CR25	2
R94	000102	1K " " "	"	"	–
R95	000106	10M 10% " "	"	"	–
R96	011473	147K 1% 50ppm MF	HOLCO	H8	1
R97		NOT USED			–
R98		NOT USED			–
R99	000472	4K7 5% 1/4W CARBON	MULLARD	CR25	–
R100	000472	4K7 " " "	"	"	–
R101	000100	10R 5% 1/4W CARBON	MULLARD	CR25	–
R102	000100	10R " " "	"	"	–
R103	000271	270R " " "	"	"	4
R104	000151	150R " " "	"	"	1
R105	000271	270R " " "	"	"	–
R106	000222	2K2 " " "	"	"	–
R107	000222	2K2 " " "	"	"	–
R108	090038	10K811 ATTEN SET	MANN		1 SET
R109	090038	10K811 "	"		–
R110	090038	9K "	"		–
R111	090038	1K "	"		–
R112	000682	6K8 5% 1/4W CARBON	MULLARD	CR25	1
R113	000105	1MO 10% 1/4W CARBON	"	"	–
R114	042214	2M21.1% 100ppm CERMET FILM	ALLEN BRADLEY	TYPE CC	1
R115	041004	1M 1% 100ppm CERMET FILM	"	"	1

NOTES.

SEE SHEET 2 FOR LATEST ISSUE

ISS												
E.C.O.												
DATE												
CHKD.												

DATE 12-7-78
DRAWN B.J.
CHECKED
APPROVED
DATE

datron ELECTRONICS LTD

TITLE 1061 ANALOGUE PCB ASSEMBLY.

DRAWING NUMBER 400328 SHEET 6 OF 24

DESIGNATOR	DATRON PART No.	DESCRIPTION	PRINCIPAL MANUFACTURER	MANUFACTURER'S PART No.	No. USED Per Assy.
R116	000105	1M 5% 1/4W CARBON	MULLARD	CR25	–
R117	000105	1M " " "	"	"	–
R118	000105	1M " " "	"	"	–
R119	008012	27K 2W CARBON FILM	PIHER	"	2
R120	008012	27K " " "	"	"	–
R121	008011	22K " " "	"	"	2
R122	008011	22K " " "	"	"	–
R123	000225	2M2 5% 1/4W CARBON	MULLARD	CR25	2
R124	011213	121K 1% 50ppm MF	HOLCO	H8	2
R125	000225	2M2 5% 1/4W CARBON	MULLARD	CR25	–
R126	013651	3K65 1% 50 ppm MF	HOLCO	H8	1
R127	04-1005	10MO 1% 1/2W 100ppm C.F	ALLEN BRADLEY	CC	1
R128	042215	22M1 1% 100 ppm C.F	ALLEN-BRADLEY	CC	2
R129	042215	22M1 " 100ppm "	"	"	–
R130	000362	3K6 5% 1/4W CARBON	MULLARD	CR25	2
R131	000362	3K6 " " "	"	"	–
R132	000105	1M " " "	"	"	–
R133	000105	1M " " "	"	"	–
R134	000394	390K " " "	"	"	1
R135	000275	2M7 " " "	"	"	–
R136	000395	3M9 " " "	"	"	1
R137	000223	22K " " "	"	"	3
R138	000125	1M2 " " "	"	"	1

NOTES.

SEE SHEET 2 FOR LATEST ISSUE

ISS												
E.C.O.												
DATE												
CHKD.												

DATE 12-7-78
DRAWN B J
CHECKED
APPROVED
DATE

datron ELECTRONICS LTD

TITLE 1061 ANALOGUE PCB ASSEMBLY

DRAWING NUMBER 400328 SHEET 7 OF 24

DESIGNATOR	DATRON PART No	DESCRIPTION	PRINCIPAL MANUFACTURER	MANUFACTURER'S PART No	No USED Per Assy
R139	000336	33M 10% ¼W CARBON	ALLEN-BRADLEY	CB3361	1
R140	090049	18M MATCHED PAIR	HOLCO		1 PAIR
R141	090049	18M " "	"		
R142	000272	2K7 5% ¼W CARBON	MULLARD	CR25	1
R143	090039	3M3, 10M INPUT ATTEN SET	MANN		1 SET
R144	000100	10R 5% ¼W CARBON	MULLARD	CR25	-
R145	000100	10R " " "	"	"	-
R146	000222	2K2 " " "	"	"	-
R147	000752	7K5 " " "	"	"	1
R148	090039	100K, 10M INPUT ATTEN. SET	MANN		-
R149	090039	3M3, " " " "	"		-
R150	063204	200K POT CERMET	BECKMAN	72P	1
R151	063205	2M POT CERMET	"	"	1
R152	011000	100R 1% MF (DO NOT SOLDER)	HOLCO	H8C	1
R153	011822	18K2 1% ⅛W MF	HOLCO	H8	1
R154	000103	10K 5% ¼W CARBON	MULLARD	CR25	-
R155	000221	220R " " "	"	"	-
R156	090039	3M3, 10M INPUT ATTEN SET	MANN		-
R157	000103	10K 5% ¼W CARBON	MULLARD	CR25	-
R158	000332	3K3 " " "	"	"	1
R159	063103	10K POT CERMET	BECKMAN	72P	1
R160	063504	500K " "	"	"	-
R161	000104	100K 5% ¼W CARBON	MULLARD	CR25	-

NOTES.

SEE SHEET 2 FOR LATEST ISSUE

ISS												
E.C.O.												
DATE												
CHKD												

DATE 12-7-78
DRAWN B J
CHECKED
APPROVED
DATE

datron ELECTRONICS LTD

TITLE 1061 ANALOGUE PCB ASSEMBLY.

DRAWING NUMBER 400328 SHEET 8 OF 24

DESIGNATOR	DATRON PART No	DESCRIPTION	PRINCIPAL MANUFACTURER	MANUFACTURER'S PART No	No USED Per Assy
R162	000392	3K9 5% ¼W CARBON	MULLARD	CR25	-
R163	000107	100M 10% ¼W CARBON	ALLEN-BRADLEY	CB1071	1
R164	000104	100K 5% ¼W CARBON	MULLARD	CR25	-
R165	000104	100K " " "	"	"	-
R166	000563	56K 5% "	"	"	-
R167	000562	5K6 " "	"	"	-
R168	000563	56K " "	"	"	-
R169	000563	56K " "	"	"	-
R170	000564	560K " "	"	"	2
R171	000564	560K " "	"	"	-
R172	000335	3M3 10% ¼W CARBON	MULLARD	CR25	1
R173	000680	68R 5% "	"	"	2
R174	000152	1K5 " "	"	"	2
R175	000822	8K2 " "	"	"	-
R176	000680	68R " "	"	"	-
R177	000152	1K5 " "	"	"	-
R178	000822	8K2 " "	"	"	-
R179	440067	PART OF KIT	DATRON.		1
R180	440067	" " "	"		-
R181	440067	" " "	"		-
R182	000472	4K7 5% ¼W CARBON	MULLARD	CR25	-
R183	000472	4K7 5% " "	"	"	-
R184	000270	27R " "	"	"	2

NOTES.

SEE SHEET 2 FOR LATEST ISSUE

ISS												
E.C.O.												
DATE												
CHKD												

DATE 12-7-78
DRAWN B J
CHECKED
APPROVED
DATE

datron ELECTRONICS LTD

TITLE 1061 ANALOGUE PCB ASSEMBLY.

DRAWING NUMBER 400328 SHEET 9 OF 24

DESIGNATOR	DATRON PART No.	DESCRIPTION	PRINCIPAL MANUFACTURER	MANUFACTURER'S PART No.	No. USED Per Assy.
R185	000223	22K 5% ¼W CARBON	MULLARD	CR25	1
R186	000104	100K			-
R187	000222	2K2			-
R188	000103	10K			-
R189	000103	10K			-
R190	000561	560R			2
R191	000561	560R			-
R192	000155	1M5			1
R193	000104	100K			-
R194	001213	121K 1% ⅛W M.F.	HOLCO	H8	-
R195	001512	5K1 " " "		"	1
R196	000223	22K 5% ¼W CARBON	MULLARD	CR25	-
R197	000222	2K2			-
R198	001002	10K 1% ⅛W M.F.	HOLCO	H8	1
R199	008007	10R 5% 0·2W CARBON	MULLARD	CR16	2
R200	008007	10R			-
R201	000824	820K 5% ¼W CARBON	MULLARD	CR25	-
R202	000103	10K			-
R203	000104	100K			-
R204	000105	1M			-
R205	000105	1M			-
R206	000563	56K			-
R207	000103	10K			-

NOTES

SEE SHEET 2 FOR LATEST ISSUE

DATE	12-7-78	datron ELECTRONICS LTD	
DRAWN	B J	TITLE	1061 ANALOGUE PCB ASSEMBLY.
CHECKED			
APPROVED		DRAWING NUMBER	400328
DATE		SHEET	10 OF 24

DESIGNATOR	DATRON PART No.	DESCRIPTION	PRINCIPAL MANUFACTURER	MANUFACTURER'S PART No.	No. USED Per Assy.
R208	000333	33K 5% ¼W CARBON	MULLARD	CR25	1
R209	000563	56K			-
R210	000103	10K			-
R211	050038	6K34 1% 15 ppm MF	ACI	EE-0·100 C4	-
R212	050034	825R 1% 15ppm MF	ACI	EE-0·100 C4	-
R213	050037	4K75 1% 15ppm MF	ACI	EE-0·100 C4	-
R214	070115	12KΩ 1% 10ppm WW	MANN	MX125	-
R215	000271	270R 5% ¼W CARBON	MULLARD	CR25	-
R216	000271	270R 5% ¼W CARBON	MULLARD	CR25	-
R217		NOT USED			-
R218	090063	P.T.C. THERMISTOR	TEXAS	TSP102K	1
R219	000224	220K 5% ¼W CARBON	MULLARD	CR25	3
R220	000124	120K " " "	"	"	-
R221	000224	220K " " "	"	"	-
R222	000224	220K " " "	"	"	-
R223					
R224	012212	22K1 1% ⅛W 50ppm MF	HOLCO	H8C	2
R225	012212	22K1 1% ⅛W 50ppm MF	HOLCO	H8C	-
R226	000223	22K 5% ¼W CARBON	MULLARD	CR25	-
R227	000471	470R 5% ¼W CARBON	MULLARD	CR25	1
R228		NOT USED			-
R229		NOT USED			-
R230		NOT USED			-

NOTES

SEE SHEET 2 FOR LATEST ISSUE

DATE	12-7-78	datron ELECTRONICS LTD	
DRAWN	B J	TITLE	1061 ANALOGUE PCB ASSEMBLY.
CHECKED			
APPROVED		DRAWING NUMBER	400328
DATE		SHEET	11 OF 24

DESIGNATOR	DATRON PART No	DESCRIPTION	PRINCIPAL MANUFACTURER	MANUFACTURER'S PART No	No. USED Per Assy
R231	000104	100K 5% ¼W CARBON	MULLARD	CR25	—
R232		NOT USED			—
R233	000102	1K 5% ¼W CARBON	MULLARD	CR25	—
R234	000102	1K 5% ¼W CARBON	MULLARD	CR25	—
R235	000102	1K 5% ¼W CARBON	MULLARD	CR25	—
R236	016192	61k9 1% ⅛W 50ppm MF	HOLCO	H8C	2
R237	016192	61k9 1% ⅛W 50ppm MF	HOLCO	H8C	—
R238	000104	100K 5% ¼W CARBON	MULLARD	CR25	—
R239	000102	1K 5% ¼W CARBON	MULLARD	CR25	—
R240	000472	4k7 5% ¼W CARBON	MULLARD	CR25	—
R241	000331	330R 5% ¼W CARBON	MULLARD	CR25	1
R242	000103	10K 5% ⅓W CARBON	MULLARD	CR25	—
AN1	090050	3K3 SIL NETWORK	BECKMAN	764-1-R3-3K	1
AN2	090042	R-2R LADDER NETWORK	ERIE		1
C1	150020	10µF 20% 25V DIP TANT	UNION CARBIDE	K10E25	12
C2	150020	10µF 20% 25V DIP TANT	UNION CARBIDE	K10E25	—
C3	104017	0·5pF 500V CER DISC	ERIE	831	1

NOTES

SEE SHEET 2 FOR LATEST ISSUE

ISS														
E.C.O.														
DATE														
CHKD														

DATE 29-10-79

DRAWN B. JACKSON

CHECKED

APPROVED

DATE

datron ELECTRONICS LTD

TITLE 1061 ANALOGUE PCB ASSY.

DRAWING NUMBER 400328

SHEET 12 OF 24

DESIGNATOR	DATRON PART No	DESCRIPTION	PRINCIPAL MANUFACTURER	MANUFACTURER'S PART No	No. USED Per Assy
C4	150020	10µF 20% 25V DIP TANT	UNION CARBIDE	K10E25	—
C5	102471	470pF 500V CER DISC	ERIE	801	3
C6	150020	10µF 20% 25V DIP TANT	UNION CARBIDE	K10E25	—
C7	150020	10µF " " " "			—
C8	102150	15pF 500V CER DISC	ERIE	801	1
C9	140016	0·47µF 400V POLYPROP	RIFA	PHE 412 HFK	1
C10	110015	0·015µF 63V POLYESTER	WIMA	FKS2	1
C11	120026	680pF 20% 100v POLYCARB	WIMA	FKC2 MIN	1
C12	120004	680nF 10% 63v POLYCARB	ASHCROFT	A2B6811B	1
C13	102101	100pF 500V CER DISC	ERIE	801	3
C14	150020	10µF 20% 25V DIP TANT	UNION CARBIDE	K10E25	—
C15	150020	10µF " " " "			—
C16	102101	100pF 500V CER DISC	ERIE	801	—
C17	102100	10pF 500V CER DISC	ERIE	801	1
C18	150020	10µF 20% 25V DIP TANT	UNION CARBIDE	K10E25	—
C19	150020	10µF " " " "			—
C20	102470	47pF 500V CER DISC	ERIE	801	4
C21	102470	47pF 500V CER DISC	ERIE	801	—
C22	102101	100pF 500V CER DISC			—
C23	101103	0·01µF 250V CER DISC			6
C24	101103	0·01µF 250V CER DISC			—
C25	150020	10µF 20% 25V DIP TANT	UNION CARBIDE	K10E25	—
C26	102471	470pF 500V CER DISC	ERIE	801	—

NOTES

SEE SHEET 2 FOR LATEST ISSUE

ISS														
E.C.O.														
DATE														
CHKD														

DATE 12-7-78

DRAWN BJ

CHECKED

APPROVED

DATE

datron ELECTRONICS LTD

TITLE 1061 ANALOGUE PCB ASSEMBLY.

DRAWING NUMBER 400328

SHEET 13 OF 24

DESIGNATOR	DATRON PART No	DESCRIPTION	PRINCIPAL MANUFACTURER	MANUFACTURER'S PART No	No. USED Per Assy
C27	101103	0·01μF 250V CER DISC	ERIE	801	–
C28	102470	47pF 500V			–
C29	102470	47pF 500V			–
C30		NOT USED			–
C31	130073	1nF 5% 160V POLYSTYRENE	SUFLEX	HS01000 S-10/100	1
C32	101103	0·01μF 250V CER DISC	ERIE	801	–
C33	110013	0·1μF 10% 250V POLYESTER	MULLARD	C280AE/P10K	3
C34	101103	0·01μF 250V CER DISC	ERIE	801	–
C35	120016	2n2F 20% 100V POLYCARB	WIMA	FKC2MIN	1
C36	102470	470pF 500V CER DISC			–
C37	110013	0·1μF 10% 250V POLYESTER	MULLARD	C280AE/P10K	–
C38	102102	1nF 10% 500V CER DISC	ITT	CD10	2
C39	440067	PART OF KIT	DATRON		–
C40	440067	" " "	"		–
C41	440067	" " "	"		–
C42	110013	0·1μF 10% 250V POLYESTER	MULLARD	C280AE/P10K	–
C43	150020	10μF 20% 25V DIP TANT	UNION CARBIDE	KI0E25	–
C44	150020	10μF			–
C45	180006	47μF 25V AL ELECT	MULLARD	016-16479	2
C46	180006	47μF 25V			–
C47	180022	33μF 40V		016-17339	2
C48	180022	33μF 40V			–
C49	180024	10μF 63V AL ELECT	MULLARD	016-18109	2

NOTES

SEE SHEET 2 FOR LATEST ISSUE

ISS												
ECO												
DATE												
CHKD												

DATE 12-7-78 | DRAWN BJ | CHECKED | APPROVED | DATE

datron ELECTRONICS LTD

TITLE 1061 ANALOGUE PCB ASSEMBLY

DRAWING NUMBER 400328 | SHEET 14 OF 24

DESIGNATOR	DATRON PART No	DESCRIPTION	PRINCIPAL MANUFACTURER	MANUFACTURER'S PART No	No. USED Per Assy
C50	180024	10μF 63V AL ELECT	MULLARD	016-18109	–
C51	101103	0·01μF 250V CER DISC	ERIE	801	–
C52	110017	0·022μF 10% 250V POLYESTER	MULLARD	C280AE/P22K	1
C53	102332	3n3F 500V CER DISC	ERIE	801	2
C54	102332	3n3F			–
C55	440067	PART OF KIT	DATRON		–
C56	150016	1μF 20% 35V DIP TANT	UNION CARBIDE	KIR0E35	1
C57	130013	18pF ±1pF 160V POLYSTYRENE	SUFLEX	HS	1
C58	110027	3300pF 20% 100V POLYESTER	WIMA	FKS2-MIN	1
C59		NOT USED			–
C60	102222	2n2F 500V CER DISC	ERIE	801	1
C61		NOT USED			
C62		NOT USED			
C63		NOT USED			
C64	102102	1nF 10% 500V CER DISC	ITT	CD10	–
D1	200008	SI LOW LEAKAGE	FAIRCHILD	1N458A	25
D2	210056	C5V6 400mW ZENER	MULLARD	BZY88C	2
D3	200008	SI LOW LEAKAGE	FAIRCHILD	1N458A	–
D4	210056	C5V6 400mW ZENER	MULLARD	BZY88C	–
D5	200001	SI GEN. PURPOSE	FAIRCHILD	1N4148	19
D6	200008	SI LOW LEAKAGE	FAIRCHILD	1N458A	–

NOTES

SEE SHEET 2 FOR LATEST ISSUE

ISS												
ECO												
DATE												
CHKD												

DATE 12-7-78 | DRAWN BJ | CHECKED | APPROVED | DATE

datron ELECTRONICS LTD

TITLE 1061 ANALOGUE PCB ASSEMBLY

DRAWING NUMBER 400328 | SHEET 15 OF 24

DESIGNATOR	DATRON PART No.	DESCRIPTION	PRINCIPAL MANUFACTURER	MANUFACTURER'S PART No.	No. USED Per Assy
D7	200008	SI LOW LEAKAGE	FAIRCHILD	1N458A	–
D8	210082	CBV2 400mW ZENER	MULLARD	BZY88C	1
D9	200008	SI LOW LEAKAGE	FAIRCHILD	1N458A	–
D10	200008	"	"	"	–
D11	200008	"	"	"	–
D12	200001	SI GEN PURPOSE	FAIRCHILD	1N4148	–
D13	200001	"	"	"	–
D14	200001	"	"	"	–
D15	200001	"	"	"	–
D16	200008	SI LOW LEAKAGE	FAIRCHILD	1N458A	–
D17	200008	"	"	"	–
D18	210068	C6V8 400mW ZENER	MULLARD	BZY88C	2
D19	210068	"	"	"	–
D20	200008	SI LOW LEAKAGE	FAIRCHILD	1N458A	–
D21	200001	SI GEN PURPOSE	FAIRCHILD	1N4148	–
D22	210220	C22V 400mW ZENER	MULLARD	BZY88C	2
D23	210220	"	"	"	–
D24	200001	SI GEN PURPOSE	FAIRCHILD	1N4148	–
D25	200008	SI LOW LEAKAGE	FAIRCHILD	1N458A	–
D26	200008	"	"	"	–
D27	200008	"	"	"	–
D28	200008	"	"	"	–
D29	200008	"	"	"	–

NOTES

SEE SHEET 2 FOR LATEST ISSUE

DATE	12-7-78	datron ELECTRONICS LTD	
DRAWN	BJ	TITLE	1061 ANALOGUE PCB ASSEMBLY
CHECKED			
APPROVED			
DATE		DRAWING NUMBER	400328
		SHEET	16 OF 24

DESIGNATOR	DATRON PART No.	DESCRIPTION	PRINCIPAL MANUFACTURER	MANUFACTURER'S PART No.	No. USED Per Assy
D30	200008	SI LOW LEAKAGE	FAIRCHILD	1N458A	–
D31	200001	SI GEN PURPOSE	FAIRCHILD	1N4148	–
D32	200001	"	"	"	–
D33	200001	"	"	"	–
D34	200001	"	"	"	–
D35	210047	C4V7 400mW ZENER	MULLARD	BZY88C	2
D36	200008	SI LOW LEAKAGE	FAIRCHILD	1N458A	–
D37	200008	"	"	"	–
D38	200008	"	"	"	–
D39	200008	"	"	"	–
D40	200001	SI GEN PURPOSE	FAIRCHILD	1N4148	–
D41	200001	SI GEN PURPOSE	FAIRCHILD	1N4148	–
D42	200001	"	"	"	–
D43	200002	SI RECTIFIER 1A 50V	MOTOROLA	1N4001	4
D44	200002	"	"	"	–
D45	200002	"	"	"	–
D46	200002	"	"	"	–
D47	210150	C15V 400mW ZENER	MULLARD	BZY88C	1
D48	200001	SI GEN PURPOSE	FAIRCHILD	1N4148	–
D49	210200	C20V 400mW ZENER	MULLARD	BZY88C	2
D50	210100	C10V 400mW ZENER	MULLARD	BZY88C	2
D51	210100	"	"	"	–
D52	210200	C20V 400mW ZENER	MULLARD	BZY88C	–

NOTES

SEE SHEET 2 FOR LATEST ISSUE

DATE	12-7-78	datron ELECTRONICS LTD	
DRAWN	BJ	TITLE	1061 ANALOGUE PCB ASSEMBLY
CHECKED			
APPROVED			
DATE		DRAWING NUMBER	400328
		SHEET	17 OF 24

DESIGNATOR	DATRON PART No.	DESCRIPTION	PRINCIPAL MANUFACTURER	MANUFACTURERS PART No.	No. USED Per Assy.
D53	200008	SI LOW LEAKAGE	FAIRCHILD	IN458A	–
D54	200008	"	"	"	–
D55	200001	SI GEN PURPOSE		IN4148	–
D56	200001	"		"	–
D57		NOT USED			–
D58		NOT USED			–
D59	219007	214013 SELECTED WITH R 58			2
D60	219007	214013 SELECTED WITH R 58			–
D61	210033	C3V3 400 mW ZENER	MULLARD	BZY88C3V3	2
D62	210033	"	"	"	–
D63	200001	SI GEN PURPOSE	FAIRCHILD	IN4148	–
D64	210120	12V 400mW ZENER	MULLARD	BZY88C12	2
D65	210120	12V 400mW ZENER	MULLARD	BZY88C12	–
D66	200008	SI LOW LEAKAGE	FAIRCHILD	IN458A	–
D67	200008	"	"	"	–
D68	200008	"	"	"	–
D69		NOT USED			
D70		NOT USED			
D71	210047	4V7 400mw ZENER	MULLARD	BZY88C4V7	–
D72	200001	SI GEN PURPOSE	FAIRCHILD	IN4148	–
D73	213009	15V 5W ZENER DIODE	UNITRODE	TVS 515	2
D74	213009	15V 5W ZENER DIODE	UNITRODE	TVS 515	–

NOTES

SEE SHEET 2 FOR LATEST ISSUE

datron

1061 ANALOGUE PCB ASSEMBLY

400328 18 24

DESIGNATOR	DATRON PART No.	DESCRIPTION	PRINCIPAL MANUFACTURER	MANUFACTURERS PART No.	No. USED Per Assy.
Q1	230001	N CHAN CURRENT LIM	SILICONIX	E506	2
Q2	250008	SIL PNP TRANSISTOR	NATIONAL	BC214C/TO18	2
Q3	250008	SIL PNP TRANSISTOR	NATIONAL	BC214C/TO18	–
Q4	230001	N CHAN CURRENT LIM	SILICONIX	E506	–
Q5	230027	LOW LEAKAGE N-FET	TELEDYNE	U3114	7
Q6	230027	" " "	"	"	–
Q7	230027	" " "	"	"	–
Q8	230027	" " "	"	"	–
Q9	230027	" " "	"	"	–
Q10	230027	" " "	"	"	–
Q11	230027	" " "	"	"	–
Q12	240017	LOW DRIFT DUAL NPN TRANS	NATIONAL	LM394	1
Q13	230002	N-CHAN J-FET	TELEDYNE	U1994E	6
Q14	230002	" " "	"	"	–
Q15	230002	" " "	"	"	–
Q16	230002	" " "	"	"	–
Q17		NOT USED			
Q18	230002	N-CHAN J-FET	TELEDYNE	U1994E	–
Q19	230002	" " "	"	"	–
Q20	240006	SI NPN	FAIRCHILD	2N3904	4
Q21	240006	"	"	"	–
Q22	240006	"	"	"	–
Q23	240006	"	"	"	–

NOTES

SEE SHEET 1 FOR EARLIER ISSUE

datron

1061 ANALOGUE PCB ASSEMBLY

400328 19 24

DESIGNATOR	DATRON PART No.	DESCRIPTION	PRINCIPAL MANUFACTURER	MANUFACTURER'S PART No.	No. USED Per Assy.
Q24	240014	Si NPN	FAIRCHILD	BC337	2
Q25	250011	Si PNP	"	BC327	2
Q26	250011	" "	"	"	–
Q27	250001	Si PNP	"	BC214	2
Q28	240014	Si NPN	"	BC337	–
Q29	240001	Si NPN	"	BC184	3
Q30	240009	Si NPN	NATIONAL	2N5550	1
Q31	250009	Si PNP	"	2N5401	1
Q32	240001	Si NPN	"	BC184	–
Q33	240001	Si NPN	"	BC184	–
Q34	250001	Si PNP	"	BC214	–
Q35	230031	N-CHAN DUAL JFET	TELEDYNE	SU2656M	3
Q36	230031	N-CHAN DUAL JFET	TELEDYNE	SU2656M	–
Q37	230031	N-CHAN DUAL JFET	TELEDYNE	SU2656M	–

NOTES

SEE SHEET 2 FOR LATEST ISSUE

ISS												
ECO												
DATE												
CHKD												

DATE	17-11-78
DRAWN	BJ
CHECKED	
APPROVED	
DATE	

datron ELECTRONICS LTD

TITLE: 1061 ANALOGUE PCB ASSEMBLY

DRAWING NUMBER: 400328 SHEET 20 OF 24

DESIGNATOR	DATRON PART No.	DESCRIPTION	PRINCIPAL MANUFACTURER	MANUFACTURER'S PART No	No. USED Per Assy.
M1 *	220030	Hi SPEED OPTO SELECTED	DATRON	HP4351 (RED)	2
M2	220017	DUAL OPTO ISOLATOR	FAIRCHILD	FCD880	7
M3	260002	LINEAR IC OP AMP	"	741HC	3
M4	220029	Hi SPEED OPTO SELECTED	DATRON	HP4351 (WHITE)	2
M5	220029	" "	"	HP4351 (WHITE)	–
M6 *	220030	" "		HP4351 (RED)	–
M7	220017	2K5v DUAL OPTO ISOLATOR	FAIRCHILD	FCD880	–
M8	220017	" " "	"	"	–
M9	220017	" " "	"	"	–
M10	220017	" " "	"	"	–
M11	220017	" " "	"	"	–
M12	280075	DUAL 4 I/P NAND	MOTOROLA	MC14012 BCP	1
M13	280015	QUAD LATCH	MOTOROLA	MC14076 BCP	4
M14	280015	" "	"	"	–
M15	260029	VOLTAGE COMPARATOR	NATIONAL	LM311HC	1
M16	280082	HEX INVERTER	FAIRCHILD	F40014 BPC	1
M17	280079	QUAD 2 I/P OR GATE	MOTOROLA	MC14071 BCP	1
M18	280008	QUAD 2 I/P NAND GATE	"	MC14011 BCP	3
M19	280008	" " " "	"	"	–
M20	280015	QUAD LATCH	"	MC14076 BCP	–
M21	280015	" "	"	"	–
M22	260057	5534 OP AMP (DIL)	SIGNETICS	NE5534N	1
M23	220019	DUAL OPTO ISOLATOR	FAIRCHILD	FCD880/SELECTED	1

NOTES * ALTERNATIVE HP4351 (220018)

SEE SHEET 2 FOR LATEST ISSUE

ISS												
ECO												
DATE												
CHKD												

DATE	12-7-78
DRAWN	BJ
CHECKED	
APPROVED	
DATE	

datron ELECTRONICS LTD

TITLE: 1061 ANALOGUE PCB ASSEMBLY

DRAWING NUMBER: 400328 SHEET 21 OF 24

DESIGNATOR	DATRON PART No.	DESCRIPTION	PRINCIPAL MANUFACTURER	MANUFACTURER'S PART No.	No. USED Per Assy.
M24	220017	DUAL OPTO ISOLATOR	FAIRCHILD	FCD880	–
M25	260069	411 OP AMP	NATIONAL	LF411CH	3
M26	280022	QUAD BILATERAL SWITCH	MOTOROLA	MC14016 BCP	1
M27	280008	QUAD 2 I/P NAND GATE		MC14011 BCP	–
M28	280044	BINARY UP DOWN COUNTER		MC14516 BCP	1
M29	280011	DUAL D FLIP-FLOP		MC14013 BCP	1
M30	260026	LINEAR IC OP AMP	NATIONAL	LM212H	2
M31	260069	411 OP AMP	"	LF411CH	–
M32	260026	LINEAR IC OP AMP	"	LM212H	–
M33	260002	" " " "	FAIRCHILD	741 HC	–
M34	260069	411 OP AMP	NATIONAL	LF411CH	–
M35	* 290082	4051 MUX SELECTED	DATRON	MC14051 BCL (GREEN)	1
M36	260002	741 OP AMP	FAIRCHILD	μA 741 HC	–
M37		NOT USED			
M38		NOT USED			
M39	260028	DUAL LINEAR IC	FAIRCHILD	μA1458CTC	1

NOTES * ALTERNATIVE 290081 MC14051BCL (WHITE)

SEE SHEET 2 FOR LATEST ISSUE

DATE 12-7-78
DRAWN B J
CHECKED
APPROVED
DATE

datron ELECTRONICS LTD

TITLE 1061 ANALOGUE PCB ASSEMBLY

DRAWING NUMBER 400328

SHEET 22 OF 24

DESIGNATOR	DATRON PART No.	DESCRIPTION	PRINCIPAL MANUFACTURER	MANUFACTURER'S PART No.	No. USED Per Assy.
RL1	330018	RELAY 2P2W 7v HOLD IN	P&B	SEE DRAWING	1
RL2	330017	RELAY 1P2W MINATURE	OMROM	G2E 184PH (12VDC)	1
	400379/1	WIRE / TERMINAL ASSY			7
	400379/2	" " "			4
	410095-8A	P.C.B.			1
	459112	RELAY BRACKET	KDP		1
	540002	22 SWG TINNED COPPER WIRE			A/R
	512999	7/0·2 PTFE INSUL WHITE WIRE			165mm
	590001	SLEEVE MAXCABLE Ø 3·0	HELLERMANN ELECTRIC	H15 x 20mm BLK HELSYN	5
	590004	SLEEVE – PTFE 1mm	–"– –"–	FE10	A/R
	590055	SLEEVE Ø 1·0 SIL RUBBER	–"– –"–	H15 CONT. BLACK	250mm
J3	571075/C	16 WAY AP/3M RIBBON CABLE	DATRON		1
	602001	F.S.V. TERMINAL	MOLEX	02-04-1875	6
J2,4,5	605002	16 WAY D.L. SOCKET	JERMYN	A23-200/Y	3
	605060	14 WAY D.L. SOCKET	ASTRALUX	ICL143-S3T	8
	605061	16 WAY D.L. SOCKET	ASTRALUX	ICL143-S6T	2
J1 & J6	605051	8 WAY POLARISED SOCKET	MOLEX	22-01-2085	2
	605050	8 WAY D.L. SOCKET	ASTRALUX	ICL-083-S6T	5
	606005	CLIP FOR 605002	ANTIFERENCE	RC-74	3

NOTES

SEE SHEET 2 FOR LATEST ISSUE

DATE 12-7-78
DRAWN B J
CHECKED
APPROVED
DATE

datron ELECTRONICS LTD

TITLE 1061 ANALOGUE PCB ASSEMBLY

DRAWING NUMBER 400328

SHEET 23 OF 24

DESIGNATOR	DATRON PART No.	DESCRIPTION	PRINCIPAL MANUFACTURER	MANUFACTURER'S PART No.	No. USED Per Assy.
	611004	SCREW M3 x 6mm POZ. PAN	GKN	ZINC PLATED	1
	613005	WASHER M3 INT/SHAKEPROOF ST	GKN	"	1
	6 5002	NUT M3 FULL HEX STEEL		"	1
	617010	NYLATCH PLUNGER HN3P	RICHCO	HN3P-32-4-1	8
	617011	" GROMMET HN3G	"	HN3G-32-1	8
	620005	CLOVERLEAF PTFE TERM.	SEALECTRO	FTE 15 P20	7
	620007	TEST POINT TERMINAL	MICROVAR	C30	25
	620003	SOLDER PCB TERMINAL LUG	HARWIN	H2105A	5
	630036	STANDARD STEATITE INSUL BEAD	PARK ROYAL PORCELAIN CO	TYPE No1 (18 SWG)	6
	615005	NUT 3-48 UNC FULL HEX STEEL			1
	613014	WASHER M2·5 INT/SHAKEPROOF ST.	GKN DISTRIBUTORS.	ZINC PLATED	1

NOTES.

SEE SHEET 2 FOR LATEST ISSUE

ISS												
E.C.O.												
DATE												
CHKD												

DATE 12-7-78
DRAWN BJ
CHECKED
APPROVED
DATE

datron ELECTRONICS LTD

TITLE 1061 ANALOGUE PCB ASSEMBLY

DRAWING NUMBER 400328

SHEET 24 of 24

DESIGNATOR	DATRON PART No.	DESCRIPTION	PRINCIPAL MANUFACTURER	MANUFACTURER'S PART No.	No. USED Per Assy.
R1	000103	10k 5% ¼W CARBON	MULLARD	CR25	21
R2	000103	10k " " "	"	"	—
R3	000103	10k " " "	"	"	—
R4	000103	10k " " "	"	"	—
R5	000103	10k " " "	"	"	—
R6	000102	1k " " "	"	"	9
R7	000103	10k " " "	"	"	—
R8	000472	4k7 " " "	"	"	8
R9	000102	1k " " "	"	"	—
R10	000684	680k " " "	"	"	3
R11	063204	200k POT CERMET	BECKMAN	72P	1
R12	000103	10k 5% ¼W CARBON	MULLARD	CR25	—
R13	000102	1k " " "	"	"	—
R14		NOT USED			—
R15	000472	4k7 5% ¼W CARBON	"	"	—
R16	000332	3k3 " " "	"	"	3
R17	000683	68k " " "	"	"	2
R18	000222	2k2 " " "	"	"	7
R19	000393	39k " " "	"	"	1
R20	000104	100k			14
R21	000104	100k			—
R22	000104	100k " " "	"	"	—
R23	000221	220R " " "	"	"	2

NOTES. CIRCUIT DIAGRAM = 430329
CHECK PROCEDURE = 460329
CHECK LIST = 470329
SEE SHEET 2 FOR LATEST ISSUE

	28	29	30
ISS	1633/38	1664	1748/50
ECO	21-5-84	27-7-84	1.11.84
CHKD	MD	MD	MD

ISS	16	17	18	19	20	21	22	23	24	25	26	27
ECO	1147	1188	1214	1241	1243.51.53	1369	1431	1461	1519	1559	1542/588	1605
DATE	25.9.80	6.1.81	11.6.81	4.11.81	2.12.81	9.9.82	16.12.82	25.5.83	18.8.83	11.11.83	27-2-84	6.4.84
CHKD	MD	MD	MD	MD	MD	MD	MD	MD	MD	MD	MD	MD

DATE 26.6.78
DRAWN IL
CHECKED P.R.H
APPROVED
DATE

datron ELECTRONICS LTD

TITLE 1061 DIGITAL PCB. ASSY.

DRAWING NUMBER 400329 SHEET 2 OF 16

A.W. 1164

DESIGNATOR	DATRON PART No.	DESCRIPTION	PRINCIPAL MANUFACTURER	MANUFACTURER'S PART No.	No. USED Per Assy.
R24	000102	1k 5% ¼W CARBON	MULLARD	CR25	—
R25	000332	3k3 " " "	"	"	—
R26	000103	10k " " "	"	"	—
R27	000102	1k " " "	"	"	—
R28	000682	6k8 " " "	"	"	1
R29	000104	100k " " "	"	"	—
R30		NOT USED			—
R31	000472	4k7 " " "	"	"	—
R32	000472	4k7 " " "	"	"	—
R33	000222	2k2 " " "	"	"	—
R34	000104	100k " " "	"	"	—
R35	000104	100k " " "	"	"	—
R36	000104	100k " " "	"	"	—
R37	000106	10M 10% " "	"	"	1
R38	000104	100k 5% " "	"	"	—
R39	000103	10k " " "	"	"	—
R40	000103	10k " " "	"	"	—
R41	000332	3k3 " " "	"	"	—
R42	000103	10k " " "	"	"	—
R43	000104	100k " " "	"	"	—
R44	000103	10k " " "	"	"	—
R45	000364	360K " " "	"	"	1
R46	000472	4k7 " " "	"	"	—

NOTES.

SEE SHEET 2 FOR LATEST ISSUE

ISS												
ECO												
DATE												
CHKD												

DATE
DRAWN IL
CHECKED P.R.H
APPROVED
DATE

datron ELECTRONICS LTD

TITLE 1061 DIGITAL PCB. ASSY.

DRAWING NUMBER 400329 SHEET 3 OF 16

A.W. 1164

DESIGNATOR	DATRON PART No.	DESCRIPTION	PRINCIPAL MANUFACTURER	MANUFACTURER'S PART No.	No. USED Per Assy.
R47	000103	10k 5% ¼W CARBON	MULLARD	CR25	—
R48	000104	100k " " "	"	"	—
R49	000103	10k " " "	"	"	—
R50	000104	100k " " "	"	"	—
R51	000562	5k6 " " "	"	"	1
R52	000224	220k " " "	"	"	1
R53	000123	12k " " "	"	"	1
R54	000105	1M " " "	"	"	1
R55	000684	680k " " "	"	"	—
R56	000823	82 k " " "	"	"	1
R57		NOT USED			—
R58	000100	10R " " "	"	"	2
R59	000220	22R " " "	"	"	2
R60	000220	22R " " "	"	"	—
R61	000100	10R " " "	"	"	—
R62		NOT USED			—
R63	000222	2k2 5% ¼W CARBON	MULLARD	CR25	—
R64	000222	2k2 " " "	"	"	—
R65	000103	10k " " "	"	"	—
R66	000103	10k " " "	"	"	—
R67	000271	270R " " "	"	"	1
R68	000103	10k " " "	"	"	—
R69	000561	560R " " "	"	"	1

NOTES.

SEE SHEET 2 FOR LATEST ISSUE

ISS													
ECO													
DATE													
CHKD													

DATE

DRAWN IL.

CHECKED P.A.H.

APPROVED

DATE

datron ELECTRONICS LTD

TITLE 1061 DIGITAL PCB. ASSY.

DRAWING NUMBER 400329

SHEET 4 OF 16

J.W. 1164

DESIGNATOR	DATRON PART No.	DESCRIPTION	PRINCIPAL MANUFACTURER	MANUFACTURER'S PART No.	No. USED Per Assy.
R70	000222	2k2 5% ¼W CARBON	MULLARD	CR25	—
R71	000102	1k " " "	"	"	—
R72	000221	220R " " "	"	"	—
R73	000102	1k " " "	"	"	—
R74	000124	120k " " "	"	"	1
R75	000471	470R " " "	"	"	1
R76	000824	820k " " "	"	"	1
R77		NOT USED			—
R78		NOT USED			—
R79	000472	4k7 " " "	"	"	—
R80	000683	68k " " "	"	"	—
R81	000183	18k " " "	"	"	1
R82	000334	330k " " "	"	"	1
R83	063202	2k POT CERMET	BECKMAN	72 P	1
R84	000223	22k 5% ¼W CARBON	MULLARD	CR25	1
R85	000472	4k7 " " "	"	"	—
R86		NOT USED			—
R87	000104	100k			—
R88	000103	10k " " "	"	"	—
R89	000103	10k " " "	"	"	—
R90		NOT USED			—
R91	012002	20kΩ 1% ⅛W 50ppm MF	HOLCO	H8C	1
R92	015231	5k23 " " "	"	"	1

NOTES.

SEE SHEET 2 FOR LATEST ISSUE

ISS													
ECO													
DATE													
CHKD													

DATE

DRAWN IL.

CHECKED P.A.H.

APPROVED

DATE

datron ELECTRONICS LTD

TITLE 1061 DIGITAL PCB. ASSY.

DRAWING NUMBER 400329

SHEET 5 OF 16

J.W. 1164

DESIGNATOR	DATRON PART No.	DESCRIPTION	PRINCIPAL MANUFACTURER	MANUFACTURER'S PART No.	No. USED Per Assy.
R93		NOT USED			—
R94	000102	1k 5% ¼W CARBON	MULLARD	CR25	—
R95	000472	4k7 " " "	"	"	—
R96	000103	10k " " "	"	"	—
R97	000222	2k2 " " "	"	"	—
R98		NOT USED			—
R99	000104	100k 5% ¼W CARBON	"	"	—
R100	000104	100k " "	"	"	—
R101	000684	680k " "	"	"	—
R102	000103	10k " " "	"	"	—
R103	000222	2k2 " "	"	"	—
R104	000102	1k " "	"	"	—
AN1	090046	10k x 7 2% NETWORK	BECKMAN	764-1-R10k	5
AN2		NOT USED			—
AN3	090046	10k x 7 2% NETWORK	BECKMAN	764-1-R10k	—
AN4	090042	8 BIT 'R-2R' LADDER NETWORK	SEE DRG		1
AN5	090046	10k x 7 2% NETWORK	BECKMAN	764-1-R10k	—
AN6	090046	10k x 7 2% NETWORK	BECKMAN	764-1-R10k	—
AN7	090046	10k x 7 2% NETWORK	BECKMAN	764-1-R10K	—

NOTES.

SEE SHEET 2 FOR LATEST ISSUE

ISS												
E.C.O.												
DATE												
CHK'D												

DATE

DRAWN I.L.

CHECKED P.R.H.

APPROVED

DATE

datron ELECTRONICS LTD

TITLE 1061 DIGITAL PCB. ASSY.

DRAWING NUMBER 400329

SHEET 6 OF 16

DESIGNATOR	DATRON PART No.	DESCRIPTION	PRINCIPAL MANUFACTURER	MANUFACTURER'S PART No.	No. USED Per Assy.
C1	150002	10µF 20% 16v DIP TANT	UNION CARBIDE	K10E16	14
C2	150002	10µF " " " "	" "	"	—
C3	150002	10µF " " " "	" "	"	—
C4	150016	1µF " 35v " "	" "	K1R0E35	7
C5	110013	·1µF 10% 250v POLYESTER	MULLARD	C280AE/P100k	2
C6	101103	·01µF 250v CER DISC	ERIE	801	6
C7	150006	4·7µF 20% 16v DIP TANT	UNION CARBIDE	K4R7E16	1
C8		NOT USED			—
C9	150002	10µF 20% 16v DIP TANT	UNION CARBIDE	K10E16	—
C10	102101	100pF 500v CER DISC	ERIE	801	5
C11	150002	10µF 20% 16v DIP TANT	UNION CARBIDE	K10E16	—
C12	150016	1µF " 35v " "	" "	K1R0E35	—
C13	150002	10µF " 16v " "	" "	K10E16	—
C14	110013	0·1µF 10% 250v POLYESTER	MULLARD	C280AE/P100K	—
C15	150002	10µF 20% 16v DIP TANT	UNION CARBIDE	K1R0E16	—
C16	102221	220pF 500v CER DISC	ERIE	801	3
C17	150002	10µF 20% 16v DIP TANT	UNION CARBIDE	K10E16	—
C18	150002	10µF " " " "	" "	"	—
C19	150016	1µF " 35v " "	" "	K1R0E35	—
C20	150002	10µF " " " "	" "	K10E16	—
C21	102101	100pF 500v CER DISC	ERIE	801	—
C22	101103	·01µF 250v CER DISC	ERIE	801	—
C23	120016	2n2F 20% 100v POLYCARD	WIMA	FKC 2MIN	1

NOTES.

SEE SHEET 2 FOR LATEST ISSUE

ISS												
E.C.O.												
DATE												
CHK'D												

DATE

DRAWN I.L.

CHECKED P.R.H.

APPROVED

DATE

datron ELECTRONICS LTD

TITLE 1061 DIGITAL PCB. ASSY.

DRAWING NUMBER 400329

SHEET 7 OF 16

DESIGNATOR	DATRON PART No.	DESCRIPTION	PRINCIPAL MANUFACTURER	MANUFACTURER'S PART No.	No. USED Per Assy.
C24	130016	130pF 2½% 25v POLYSTYRENE	SUFLEX	HSQ130/2½-7/25	1
C25	102471	470pf 500v Cer Disc	ERIE	801	2.
C26	150016	1μF 20% 35V DIP TANT	UNION CARBIDE	KIROE35	—
C27	150002	10μF " 16v " "	" "	K10E16	—
C28	102220	22pF 500v CER DISC	ERIE	801	3
C29	150016	1μF 20% 35V DIP TANT	UNION CARBIDE	KIROE35	—
C30	150002	10μF 20% 16V " "	" "	K10E16	—
C31	110005	·01μF 10% 250v POLYESTER	MULLARD	C280AE/P10K	2
C32	110003	·068μF			1
C33	150014	·68μF 20% 35v DIP TANT	UNION CARBIDE	KR68E35	1
C34	101103	·01μF 250v CER DISC	ERIE	801	—
C35	150002	10μF 20% 16v DIP TANT	UNION CARBIDE	K10E16	—
C36	101103	·01μF 250v CER DISC	ERIE	801	—
C37	102220	22pF 500v CER DISC		"	—
C38	102221	220pF 500v " "	"	"	—
C39	101103	·01μF 250v " "	"	"	—
C40	110005	10nF 20% 250v POLYESTER	MULLARD	C280AE/P10K	—
C41	110027	3n3F 20% 100V POLYESTER	WIMA	FKS2M1N	1
C42	102471	470pF 500v CER DISC	ERIE	801	—
C43	102101	100pF 500v CER DISC.	"	801	—
C44	150002	10μF 20% 16v DIP TANT	UNION CARBIDE	K10E16	—
C45	150016	1μF 20% 35v " "	" "	KIROE35	—
C46	102220	22pF 500v CER DISC	ERIE	801	—

NOTES.

SEE SHEET 2 FOR LATEST ISSUE

ISS														
E.C.O.														
DATE														
CHKD														

DATE

DRAWN IL.

CHECKED P.A.H.

APPROVED

DATE

datron ELECTRONICS LTD

TITLE 1061 DIGITAL PCB. ASSY.

DRAWING NUMBER 400329

SHEET 8 OF 16

J.W. 1164

DESIGNATOR	DATRON PART No.	DESCRIPTION	PRINCIPAL MANUFACTURER	MANUFACTURER'S PART No.	No. USED Per Assy.
C47	150004	100μF 20% 6V3 DIP. TANT.	UNION CARBIDE	K100E6V3	1
C48		NOT USED			—
C49	101103	·01μF 250v CER. DISC	ITT	CD10	—
C50	102101	100pF 500v CER. DISC	ITT	801	—
C51	102101	100pF 500v CER. DISC	ITT	801	—
C52		NOT USED			—
C53	102221	220pF 500v CER. DISC	ERIE	801	—
C54	130008	68pF 5% 160v POLYSTYRENE	SUFLEX	HS	1
C55	150016	1μF 20% 35v DIP TANT	UNION CARBIDE	K10E16	—
C56	104025	100nF $^{+80}_{-20}$% 50V CER DISC	SIEMENS	B37449	2
C57	104025	100nF $^{+80}_{-20}$ / 50V CER DISC	SIEMENS	B37449	—

NOTES.

SEE SHEET 2 FOR LATEST ISSUE

ISS														
E.C.O.														
DATE														
CHKD														

DATE

DRAWN IL.

CHECKED

APPROVED

DATE

datron ELECTRONICS LTD

TITLE 1061 DIGITAL PCB. ASSY.

DRAWING NUMBER 400329

SHEET 9 OF 16

J.W. 1164

DESIGNATOR	DATRON PART No.	DESCRIPTION	PRINCIPAL MANUFACTURER	MANUFACTURER'S PART No.	No. USED Per Assy.
D1	200001	75mA 75v GP. Si. DIODE	FAIRCHILD	IN4148	10
D2	200001	75mA 75v GP. Si. DIODE	FAIRCHILD	IN4148	—
D3	200001	75mA 75v GP. Si. DIODE	FAIRCHILD	IN4148	—
D4	200001	75mA 75v GP. Si. DIODE	FAIRCHILD	IN4148	—
D5	200008	200mA 125v LL Si DIODE	FAIRCHILD	IN458A	1
D6	220010	Si HOT CARRIER DIODE	HP	HSCH1001/IN6263	1
D7	210027	2V7 400mW ZENER	MULLARD	BZY88C2V7	1
D8	210033	3V3 400mW ZENER	MULLARD	BZY88C3V3	1
D9	220022	DUAL 37pF VARICAP DIODE	THOMPSON – CSF	BB204B	2
D10	200001	75mA 75v GP. Si. DIODE	FAIRCHILD	IN4148	—
D11	200001	75mA 75v GP. Si. DIODE	FAIRCHILD	IN4148	—
D12	200002	IA. 50v. GP. Si. DIODE	FAIRCHILD	IN4001	2
D13	213006	5V 5W ZENER	UNITRODE	TVS 505	1
D14	200001	75mA 75v GP. Si. DIODE	FAIRCHILD	IN4148	—
D15	200001	75mA 75v GP. Si. DIODE	FAIRCHILD	IN4148	—
D16	200002	IA. 50v. GP. Si. DIODE	FAIRCHILD	IN4001	—
D17	200001	Si GP. DIODE	FAIRCHILD	IN4148	—
D18		NOT USED			—
D19		NOT USED			—
D20	220022	DUAL 37pF VARICAP DIODE	THOMPSON – CSF	BB 204 B	—
D21	200001	75mA 75v GP. Si. DIODE	FAIRCHILD	IN4148	—

NOTES

SEE SHEET 2 FOR LATEST ISSUE

datron ELECTRONICS LTD

DRAWN IL

TITLE 1061 DIGITAL PCB. ASSY

DRAWING NUMBER 400329 SHEET 10 OF 16

DESIGNATOR	DATRON PART No.	DESCRIPTION	PRINCIPAL MANUFACTURER	MANUFACTURER'S PART No.	No. USED Per Assy.
Q1	240001	Si NPN TRANSISTOR	NATIONAL	BC184	5
Q2	240001	" " "	"	"	—
Q3	240007	" " "	"	2N3646	2
Q4		NOT USED			—
Q5	240006	Si NPN TRANSISTOR	NATIONAL	2N3904	2
Q6	250004	Si PNP "	"	2N3906	3
Q7	250004	" " "	"	"	—
Q8	240001	" NPN "	"	BC184	—
Q9	240001	" " "	"	"	—
Q10	250001	" PNP "	"	BC214	1
Q11					—
Q12	250011	" PNP "	"	BC327	1
Q13	240007	" NPN "	"	2N3646	—
Q14	240001	" " "	"	BC184	—
Q15	240006	" " "	"	2N3904	—
Q16	250004	" PNP "	"	2N3906	—
Q17	250008	" " "	"	BC214KC	1

NOTES

SEE SHEET 2 FOR LATEST ISSUE

datron ELECTRONICS LTD

DRAWN IL

CHECKED P.R.H

TITLE 1061 DIGITAL PCB. ASSY

DRAWING NUMBER 400329 SHEET 11 OF 16

DESIGNATOR	DATRON PART No.	DESCRIPTION	PRINCIPAL MANUFACTURER	MANUFACTURER'S PART No.	No. USED Per Assy.
M1	280011	DUAL D FLIP-FLOP	MOTOROLA	MC14013BCP	2
M2	280022	QUAD BILATERAL SWITCH	"	MC14016BCP	1
M3	280024	TRI-STATE HEX NON-INV BUFFER	"	MC14503BCP	–
M4	280024	" " " " " "	"	"	–
M5	280024	" " " " " "	"	"	–
M6	280024	" " " " " "	"	"	–
M7	280015	QUAD LATCH	"	MC14076BCP	5
M8	280015	" "	"	"	–
M9	280015	" "	"	"	–
M10	280024	TRI-STATE HEX NON-INV BUFFER	"	MC14503BCP	–
M11	280015	QUAD LATCH	"	MC14076BCP	–
M12	280015	" "	"	"	–
M13	280044	BINARY UP/DOWN COUNTER	"	MC14516BCP	4
M14	280044	" " " "	"	"	–
M15	290003	TIMER - ASTABLE	SIGNETICS	NE 555V	3
M16	270058	DUAL 1-of-4 DECODER	NATIONAL	74LS155	1
M17	270048	QUAD 2 I/P NAND GATE	NATIONAL	74LS00	2
M18	290113-12	4k x 8 EPROM - SEE PROG SPEC.		TMS2532JL/PROGRAMMED	1
M19	280066-1	256 x 4 STATIC RAM	SEE DRAWING		2

NOTES

SEE SHEET 2 FOR LATEST ISSUE

DATE

DRAWN IL

CHECKED P.R.H.

APPROVED

DATE

datron ELECTRONICS LTD

TITLE 1061 DIGITAL PCB. ASSY

DRAWING NUMBER 400329

SHEET 12 OF 16

J.W. 1164

DESIGNATOR	DATRON PART No.	DESCRIPTION	PRINCIPAL MANUFACTURER	MANUFACTURER'S PART No.	No. USED Per Assy.
M20	280066-1	256 x 4 STATIC RAM	SEE DRG		–
M21	270064	QUAD TRISTATE BUFFER	NATIONAL	DM 74LS125N	1
M22	280011	DUAL D FLIP-FLOP	"	MC14013BCP	–
M23	270053-3	A-D CHIP	FERRANTI	ULA 2035H	1
M24	280024	TRI-STATE HEX NON-INV BUFFER	MOTOROLA	MC14503BCP	–
M25	280024	" " " " " "	"	"	–
M26	280006	DUAL J-K FLIP-FLOP	"	MC14027BCP	1
M27	280004	14BIT BINARY COUNTER	"	MC14020BCP	1
M28	270051	DUAL 4 I/P AND GATE	NATIONAL	74LS21	2
M29	270055	DUAL 4 I/P NAND GATE	"	74LS20	2
M30	290057-19	4k x 8 EPROM - SEE PROG. SPEC		TMS 2532 JL/PROGRAM'D	1
M31	280096	1K x 4BIT STATIC CMOS RAM	SEE DRAWING		2
M32	270069	BCD DECIMAL DECODER LS	NATIONAL	DM 74LS42N	1
M33	270051	DUAL 4 I/P AND GATE	"	74LS21	–
M34	270055	DUAL 4 I/P NAND GATE	"	74LS20	–
M35	290056-19	4k x 8 EPROM - SEE PROG. SPEC		TMS 2532 JL/PROGRAM'D	1
M36	280096	1K x 4BIT STATIC CMOS RAM	SEE DRAWING		
M37	280025	QUAD BILATERAL SWITCH	MOTOROLA	MC14066BCP	2
M38	280071	TRIPLE 3 I/P NOR GATE	MULLARD	HEF 4025P	2
M39	280017	HEX INVERTER	MOTOROLA	MC14069BCP	1
M40	280083	QUAD 2 I/P NOR GATE	MULLARD	HEF 4001BP	1
M41	280044	BINARY UP/DOWN COUNTER	MOTOROLA	MC14516BCP	–
M42	280003	QUAD LATCH	"	MC14042BCP	–

NOTES.

SEE SHEET 2 FOR LATEST ISSUE

ISS

ECO

DATE

CHKD

DATE

DRAWN IL

CHECKED P.R.H.

APPROVED

DATE

datron ELECTRONICS LTD

TITLE 1061 DIGITAL PCB. ASSY

DRAWING NUMBER 400329

SHEET 13 OF 16

J.W. 1164

DESIGNATOR	DATRON PART No	DESCRIPTION	PRINCIPAL MANUFACTURER	MANUFACTURER'S PART No.	No. USED Per Assy
M43	290003	TIMER - ASTABLE	SIGNETICS	NE 555V	—
M44	270048	QUAD 2 I/P NAND GATE	NATIONAL	74LS00	—
M45	270050	HEX INVERTER	"	74LS04	1
M46	280025	QUAD BILATERAL SWITCH	MOTOROLA	MC14066BCP	—
M47	280070	DIVIDE-BY-8 COUNTER DIVIDER	MULLARD	HEF 4022P	1
M48	280071	TRIPLE 3 I/P NOR GATE	"	HEF 4025P	—
M49	280023	QUAD 2 I/P NOR GATE	MOTOROLA	MC14001BCP	1
M50	280044	BINARY UP/DOWN COUNTER	"	MC14516BCP	—
M51	280003	QUAD LATCH	"	MC14042BCP	—
M52	270056	8 I/P NAND GATE	NATIONAL	74LS30	
M53	280061	MICRO PROCESSOR CHIP	MOTOROLA	MC6800L	1
M54	270023	QUAD 2 I/P NAND GATE	NATIONAL	7437	1
M55	270054	QUAD 2 I/P AND GATE	"	74LS08	2
M56	270054	" " " "	"	"	—
M57	270057	DUAL JK FLIP-FLOP	"	74LS76	1
M58	280009	HEX INVERTER/BUFFER	MOTOROLA	MC14049	2
M59	280009	HEX INVERTER/BUFFER	MOTOROLA	MC14049	—
M60, M62	260031	VOLTAGE DETECTOR	INTERSIL	ICL8211	2
M61	290003	TIMER - ASTABLE	SIGNETICS	NE555V	—
S1		NOT USED			—
S2		NOT USED			—
S3		NOT USED			—

NOTES

SEE SHEET 2 FOR LATEST ISSUE

DATE

DRAWN IL

CHECKED P.R.H.

APPROVED

DATE

datron ELECTRONICS LTD

TITLE 1061 DIGITAL PCB ASSY

DRAWING NUMBER 400329 SHEET 14 OF 16

DESIGNATOR	DATRON PART No	DESCRIPTION	PRINCIPAL MANUFACTURER	MANUFACTURER'S PART No.	No. USED Per Assy
L1	370003	1000μH 40Ω R.F. CHOKE	SIGMA	SC10/1000	1
L2	370002	100μH 40Ω " "	TOKO	YXRS 18576	1
	590004	SLEEVE - PTFE	HELLERMAN ELECTRIC	FE10	A/R
TP1-TP33, LINKS	540002	22 SWG BTC WIRE			A/R
	920048	BUS STRIP	MEKTRON	M823 14 7.3F	1
	590055	SLEEVE ∅1.0 SIL RUBBER	HELLERMAN ELECTRIC	HIS CONT. BLACK	10 mm
	630098	COMPONENT CLIP	RICHCO	KKU-8	1
	606005	CLIP FOR 605002	ANTIFERENCE	RC74	3
J1, J2, J4	605002	16 WAY DIL LOW PROFILE SKT	JERMYN OR ANTIFERENCE	A23-2001/Y OR ICN-163-S3	3
	605065	28 WAY DIL " " "	AUGAT	328-AG39D	1
	605060	14 WAY DIL SOCKET	ASTRALUX OR JERMYN	ICL143-S3T	22
	605061	16 WAY DIL SOCKET	" "	ICL163-S6T	29
	605050	40 WAY DIL SOCKET	AUGAT	340-AG39D	1
	605063	22 WAY DIL SOCKET	AUGAT	322-AG39D	2
	605064	24 WAY DIL SOCKET	"	324-AG39D	3
	605062	18 WAY DIL SOCKET	"	318-AG39D	2
JL3	604037	PROGRAMMING CLASS 160 PLUG	"	8136-475G8	1
	605059	8 WAY DIL SOCKET	ASTRALUX	ICL-083-S6T	1
J5	605052	8 WAY POLARISED SOCKET	"	22-01-2085	1
J3	605102	24 WAY DIL SOCKET GOLD CA		CA-24S-10SD	1
	410096-11B	PCB			1

NOTES

SEE SHEET 2 FOR LATEST ISSUE

DATE

DRAWN IL

CHECKED P.R.H.

APPROVED

DATE

datron ELECTRONICS LTD

TITLE 1061 DIGITAL PCB ASSY

DRAWING NUMBER 400329 SHEET 15 OF 16

DESIGNATOR	DATRON PART No	DESCRIPTION	PRINCIPAL MANUFACTURER	MANUFACTURER'S PART No.	No. USED Per Assy.
	400379/1	WIRE/TERMINAL ASSY.			8
J6		NOT USED			—
J7		NOT USED			—
	620003	SOLDER PCB TERMINAL LUG	HARWIN	H2105A	5
	620007	TEST POINT TERMINAL	MICROVAR	C 30	32
	630036	CERAMIC BEADS 18 SWG	PARK ROYAL PORCELAIN	Nº 1	2
	920140-1	28 PIN DIL. HEATSINK	AAVID	5806B	1

NOTES:

SEE SHEET 2 FOR LATEST ISSUE

DATE	
DRAWN	IL
CHECKED	P.R.H.
APPROVED	
DATE	

datron ELECTRONICS LTD

TITLE 1061 DIGITAL PCB. ASSY.

DRAWING NUMBER 400329

SHEET 16 OF 16

DESIGNATOR	DATRON PART No.	DESCRIPTION	PRINCIPAL MANUFACTURER	MANUFACTURER'S PART No.	No. USED Per Assy.
R1	000472	4k7 5% ¼W CARBON	MULLARD	CR25	3
R2	000103	10k " " "	"	"	2
R3	000183	18k " " "	"	"	1
R4	000103	10k " " "	"	"	—
R5	000104	100k " " "	"	"	1
R6		NOT USED			—
R7		NOT USED			—
R8	000102	1k 5% ¼W CARBON	MULLARD	CR25	19
R9	000102	1k " " "	"	"	—
R10	000102	1k " " "	"	"	—
R11	000102	1k " " "	"	"	—
R12	000102	1k " " "	"	"	—
R13	000102	1k " " "	"	"	—
R14	000102	1k " " "	"	"	—
R15	000102	1k " " "	"	"	—
R16		NOT USED			—
R17		NOT USED			—
R18	000102	1k " " "	"	"	—
R19	000102	1k " " "	"	"	—
R20	000102	1k " " "	"	"	—
R21		NOT USED			—
R22	000272	2k7 5% ¼W CARBON	"	"	5
R23	000472	4k7 " " "	"	"	—

NOTES. CIRCUIT DIAGRAM = 430330
CHECK PROCEDURE = 460330
CHECK LIST = 470330

SEE SHEET 2 FOR LATEST ISSUE

ISS	C	1	2	3	4	5	6	7	8	9
ECO	—	—	789	822	854	904	100%10%5	1217	1253	1588
DATE	2.5.78	22.9.78	17 Nov 78	20 FEB 79	10 MAY 79	21.6.79	3-1-80	17.8.81	2.12.81	1-3-85
CHKD	—	[illegible]	MJD	[illegible]	MD	MD	[illegible]	MD	MD	MD

DATE	2.5.78
DRAWN	T. [illegible]
CHECKED	[illegible]
APPROVED	
DATE	

datron ELECTRONICS LTD

TITLE: 1061 DISPLAY DRIVER PCB ASSY

DRAWING NUMBER: 400330 SHEET 2 OF 7

DESIGNATOR	DATRON PART No.	DESCRIPTION	PRINCIPAL MANUFACTURER	MANUFACTURER'S PART No.	No. USED Per Assy.
R24	000272	2k7 5% ¼W CARBON	MULLARD	CR25	—
R25	000272	2k7 " " "	"	"	—
R26	000272	2k7 " " "	"	"	—
R27	000182	1k8 " " "	"	"	1
R28	000222	2k2 " " "	"	"	1
R29	000272	2k7 " " "	"	"	—
R30	000102	1k " " "	"	"	—
R31	000102	1k " " "	"	"	—
R32	000102	1k " " "	"	"	—
R33	000102	1k " " "	"	"	—
R34	000102	1k " " "	"	"	—
R35	000102	1k " " "	"	"	—
R36	000102	1k " " "	"	"	—
R37	000102	1k " " "	"	"	—
R38	000472	4k7 " " "	"	"	—
R39	000393	39k " " "	"	"	1
R40		NOT USED			—
R41	000563	56K 5% ¼W CARBON	MULLARD	CR25	1
C1	150020	10 uF 20% 25v DIP TANT	UNION CARBIDE	K10E25	3
C2		NOT USED			—
C3		NOT USED			—

NOTES:

SEE SHEET 2 FOR LATEST ISSUE

ISS												
ECO												
DATE												
CHKD												

DATE	
DRAWN	
CHECKED	
APPROVED	
DATE	

datron ELECTRONICS LTD

TITLE: 1061 DISPLAY DRIVER PCB ASSY.

DRAWING NUMBER: 400330 SHEET 3 OF 7

J.W. 1164

DESIGNATOR	DATRON PART No.	DESCRIPTION	PRINCIPAL MANUFACTURER	MANUFACTURER'S PART No.	No. USED Per Assy.
C4	110013	0·1μF 20% 250v POLYESTER	MULLARD	C280AE/P10K	8
C5	110013	" " " "	"	"	–
C6	110013	" " " "	"	"	–
C7	110013	" " " "	"	"	–
C8	110013	" " " "	"	"	–
C9	110013	" " " "	"	"	–
C10	110013	" " " "	"	"	–
C11	110013	" " " "	"	"	–
C12		NOT USED			–
C13	110005	0·01μF 20% 250v "	"	C280AE/P10K	3
C14	150020	10μF 20% 25v. DIP TANT	UNION CARBIDE	K10E25	–
C15	110005	0·01μF 20% 250v POLYESTER	MULLARD	C280AE/P10K	–
C16	110005	0·01μF 20% 250v POLYESTER	MULLARD	C280AE/P10K	–
C17	150020	10μF 20% 25v DIP TANT	UNION CARBIDE	K10E25	–
C18	180019	10μF 20% 250v AL ELECT	I.T.T.	JF10-1006 250AA	1
D1		NOT USED			–
D2		NOT USED			–
D3		NOT USED			–
D4	200001	DIODE Si GP	FAIRCHILD	IN4148	8
D5	200001	" " "	"	"	–
D6	200001	" " "	"	"	–

NOTES

SEE SHEET 2 FOR LATEST ISSUE

ISS.													
ECO													
DATE													
CHKD													

DATE	datron ELECTRONICS LTD
DRAWN	TITLE 1061 DISPLAY DRIVER PCB. ASSY.
CHECKED	
APPROVED	
DATE	DRAWING NUMBER 400330 SHEET 4 OF 7

DESIGNATOR	DATRON PART No.	DESCRIPTION	PRINCIPAL MANUFACTURER	MANUFACTURER'S PART No.	No. USED Per Assy.
D7	200001	DIODE Si GP	FAIRCHILD	IN4148	–
D8	200001	" " "	"	"	–
D9	200001	" " "	"	"	–
D10	200001	" " "	"	"	–
D11	200001	" " "	"	"	–
D12	213005	DIODE ZENER 7·5v. ½W	MOTOROLA	BZX79C7·5	1
Q1	250009	Si PNP TRANSISTOR	NATIONAL	2N5401	11
Q2	250009	" " "	"	"	–
Q3	250009	" " "	"	"	–
Q4		NOT USED			–
Q5	240009	Si NPN TRANSISTOR	"	MPS L01	8
Q6	240009	" " "	"	"	–
Q7	240009	" " "	"	"	–
Q8	240009	" " "	"	"	–
Q9	240009	" " "	"	"	–
Q10	240009	" " "	"	"	–
Q11	240009	" " "	"	"	–
Q12	240009	" " "	"	"	–
Q13	250009	" PNP "	"	2N5401	–
Q14	250009	" " "	"	"	–
Q15	250009	" " "	"	"	–
Q16	250009	" " "	"	"	–

NOTES

SEE SHEET 2 FOR LATEST ISSUE

ISS.													
ECO													
DATE													
CHKD													

DATE	datron ELECTRONICS LTD
DRAWN	TITLE 1061 DISPLAY DRIVER PCB. ASSY.
CHECKED	
APPROVED	
DATE	DRAWING NUMBER 400330 SHEET 5 OF 7

DESIGNATOR	DATRON PART No.	DESCRIPTION	PRINCIPAL MANUFACTURER	MANUFACTURER'S PART No.	No. USED Per Assy.
Q17	250009	SI PNP TRANSISTOR	NATIONAL	2N5401	–
Q18	250009	" " "	"	"	–
Q19	250009	" " "	"	"	–
Q20	250009	" " "	"	"	–
M1	280062	128 × 8 BIT STATIC RAM	MOTOROLA	MC 6810	1
M2		NOT USED			–
M3		NOT USED			–
M4	280023	QUAD 2 I/P NOR GATE	"	MC 14001 BCP	2
M5	280023	QUAD 2 I/P NOR GATE	"	"	–
M6	280024	TRI-STATE HEX NON-INV BUFFER	"	MC 14503 BCP	2
M7	280024	" " " " "	"	"	–
M8	280059	DUAL BINARY UP COUNTER	"	MC 14520 BCP	1
M9	270045	QUAD 2-1 DATA SELECT LS TTL	NATIONAL	SN74 LS157	1
M10		NOT USED			–
M11	280043	4 BIT LATCH/4 TO 16 LINE DECODER	MOTOROLA	MC14515 BCP	1
M12	270048	QUAD 2 I/P NAND LS TTL	NATIONAL	SN74 LS00	1
M13	280077	HEX GATE	MOTOROLA	MC14572	1
AN2-AN4	590065	330K×7. 2% RESISTOR NETWORK	BECKMAN	764-1-R330K	3

NOTES

SEE SHEET 2 FOR LATEST ISSUE

ISS													
E.C.O.													
DATE													
CHKD													

DATE

DRAWN

CHECKED

APPROVED

DATE

datron ELECTRONICS LTD

TITLE 1061 DISPLAY DRIVER PCB. ASSY.

DRAWING NUMBER 400330 SHEET 6 OF 7

DESIGNATOR	DATRON PART No.	DESCRIPTION	PRINCIPAL MANUFACTURER	MANUFACTURER'S PART No.	No. USED Per Assy.
J1	571095/C	16 WAY AP/3M RIBBON CABLE	DATRON	—	1
J2	605102	24 WAY DIL SKT. GOLD	CA	CA - 24S - 10SD	1
	605060	14 WAY DIL SOCKET	ASTRALUX or JERMYN	ICL 143 - S3T	3
	605061	16 WAY DIL SOCKET	" "	ICL 163 - S6T	5
	605064	24 WAY DIL SKT. TIN PLATE	AUGAT	324 - AG39D	2
TP1 - TP6	540002	22 SWG BTC WIRE			A/R
	590004	SLEEVE - PTFE	HELLERMANN ELECTRIC	FE10	A/R
	410097-5B	PCB			1
	620007	TEST POINT TERMINAL	MICROVAR	C30	5

NOTES

SEE SHEET 2 FOR LATEST ISSUE

ISS													
E.C.O.													
DATE													
CHKD													

DATE

DRAWN

CHECKED

APPROVED

DATE

datron ELECTRONICS LTD

TITLE 1061 DISPLAY DRIVER PCB. ASSY.

DRAWING NUMBER 400330 SHEET 7 OF 7

DESIGNATOR	DATRON PART No.	DESCRIPTION	PRINCIPAL MANUFACTURER	MANUFACTURER'S PART No.	No. USED Per Assy.
R1		NOT USED			
R2	090001	P.T.C. THERMISTOR	MULLARD	VA8650	2
R3	090044 }	4MO 1% MF	ACI	"	(1SET) R3 R4
R4		3K94 1% MF	ACI		–
R5	000106	10M 5% ¼W CARBON	MULLARD	CR25	5
R6	000392	3K9 " " "	"	"	2
R7	000106	10M " " "	"	"	–
R8	019761	9K76 1% 50ppm M.F.	HOLCO	H8	1
R9	090001	P.T.C. THERMISTOR	MULLARD	VA8650	–
R10		NOT USED			–
R11	000106	10M 5% ¼W CARBON	MULLARD	CR25	–
R12	000563	56K " " "	"	"	2
R13	000563	56K " " "	"	"	–
R14	000104	100K " " "	"	"	6
R15	000243	24K " " "	"	"	1
R16	000682	6K8 " " "	"	"	1
R17	000103	10K " " "	"	"	3
R18	000107	100M " " "	"	"	1
R19	000104	100K " " "	"	"	–
R20	041505	15M 1% 100ppm CF	ALLEN BRADLEY	CC	2
R21	041505	15M " " "	"	"	–
R22	000222	2K2 5% ¼W CARBON	MULLARD	CR25	2
R23	000391	390R " " "	"	"	1

NOTES.

SEE SHEET 2 FOR LATEST ISSUE

ISS	1	2c	3	4	5	6	7	8	9	10	11	12	13	14	15
ECO	RELEASED	ECO840	ECO857	895, 909, 904	933, 930	960, 972, 987	1000, 1028	1054, 1062	1109	1115, 1124	1134	1176	1217	1300	1667
DATE	5-12-78	27-2-79	4.5.79	20-6-79	13-7-79	25-10-79	3-1-80	6 FEB 80	18.4.80	3.6.80	20.6.80	12.12.80	18.8.81	30-3-82	7-8-84
CHKD		MD	MD	MD	MD	MD	MD	MD	MD	MD	MD	MD	MD	MJD	MD

DATE 10-10-78 | DRAWN B.J. | CHECKED DC | APPROVED | DATE

datron ELECTRONICS LTD

TITLE 1061 OHMS P.C.B ASSY.

DRAWING NUMBER 400331 | SHEET 2 OF 12

DESIGNATOR	DATRON PART No.	DESCRIPTION	PRINCIPAL MANUFACTURER	MANUFACTURER'S PART No.	No. USED Per Assy.
R24	070093	57K77 0·1% WIREWOUND.	MANN		1
R25	070094	577K7 0·1% WIREWOUND.	MANN		1
R26	063204	200k POT CERMET	BECKMANN	72 P	2
R27	063204	200K " "	"	"	–
R28	000105	1M 5% ¼W CARBON	MULLARD	CR25	4
R29	070082	5K777 0·1% WIREWOUND	MANN		1
R30	070091	1K2839 0·1% WIREWOUND	MANN		2
R31	070091	1K2839 0·1% "	"		–
R32	000332	3K3 5% ¼W CARBON	MULLARD	CR25	1
R33	000154	150K 5% ¼W CARBON	MULLARD	CR25	1
R34	000561	560R " " "	"	"	1
R35	000106	10M 5% ¼W CARBON	MULLARD	CR25	–
R36	041005	10M 1% 100ppm CF	ALLEN BRADLEY	CC	1
R37	090049	18M } MATCHED PAIR	HOLCO		1 PAIR
R38		18M			–
R39		F.S.V.			–
R40		F.S.V.			–
R41	000473	47K 5% ¼W CARBON	MULLARD	CR25	3
R42	000624	620K " " "	"	"	1
R43	000473	47K " " "	"	"	–
R44	000102	1K " " "	"	"	2
R45	000102	1K " " "	"	"	–
R46	000562	5K6 " " "	"	"	2

NOTES.

SEE SHEET 2 FOR LATEST ISSUE

ISS												
E.C.O.												
DATE												
CHKD.												

DATE 10-10-78 | DRAWN B.J. | CHECKED | APPROVED | DATE

datron ELECTRONICS LTD

TITLE 1061 OHMS P.C.B ASSY.

DRAWING NUMBER 400331 | SHEET 3 OF 12

DESIGNATOR	DATRON PART No	DESCRIPTION	PRINCIPAL MANUFACTURER	MANUFACTURER'S PART No	No. USED Per Assy.
R47	000473	47K 5% ¼W CARBON	MULLARD	CR25	–
R48	000433	43K " " "	"	"	1
R49	000392	3K9 " " "	"	"	–
R50	000562	5K6 " " "	"	"	–
R51	000105	1M " " "	"	"	–
R52	000104	100K " " "	"	"	–
R53	000273	27K " " "	"	"	2
R54	000104	100K " " "	"	"	–
R55	000105	1M " " "	"	"	–
R56	000824	820K " " "	"	"	1
R57	000104	100K " " "	"	"	–
R58	000273	27K " " "	"	"	–
R59	000104	100K " " "	"	"	–
R60	000123	12K " " "	"	"	1
R61	000334	330K " " "	"	"	1
R62	000222	2K2 " " "	"	"	–
R63	000223	22K " " "	"	"	1
R64	000333	33K " " "	"	"	2
R65	000821	820R " " "	"	"	1
R66	000105	1M " " "	"	"	–
R67	000474	470K " " "	"	"	1
R68	000124	120K " " "	"	"	1
R69	000103	10K " " "	"	"	–

NOTES

SEE SHEET 2 FOR LATEST ISSUE

ISS												
E.C.O.												
DATE												
CHKD												

DATE 10-10-78 | datron ELECTRONICS LTD

DRAWN B J | CHECKED | APPROVED | DATE

TITLE 1061 OHMS. P.C.B ASSY

DRAWING NUMBER 400331 | SHEET 4 OF 12

DESIGNATOR	DATRON PART No	DESCRIPTION	PRINCIPAL MANUFACTURER	MANUFACTURER'S PART No	No. USED Per Assy.
R70	000221	220R 5% ¼W CARBON	MULLARD	CR25	1
R71	000103	10k 5% ¼W CARBON	MULLARD	CR25	–
R72	000333	33k 5% ¼W CARBON	MULLARD	CR25	–
R73	000823	82k 5% ¼W CARBON	MULLARD	CR25	1
R74	000106	10M 5% ¼W CARBON	MULLARD	CR25	–
AN1	090017	100k x 7 2% NETWORK	BECKMAN	764-1-R100k	1

NOTES

SEE SHEET 2 FOR LATEST ISSUE

ISS												
E.C.O.												
DATE												
CHKD												

DATE 3.6.80 | datron ELECTRONICS LTD

DRAWN IL | CHECKED | APPROVED | DATE

TITLE 1061 OHMS PCB. ASSY.

DRAWING NUMBER 400331 | SHEET 5 OF 12

DESIGNATOR	DATRON PART No	DESCRIPTION	PRINCIPAL MANUFACTURER	MANUFACTURER'S PART No	No. USED Per Assy
C1	120028	4700pF 20% 100V POLYCARB	WIMA	FKC-2 MIN	1
C2	120026	680pF 20% 100V POLYCARB	WIMA	FKC-2 MIN	1
C3	102470	47pF 500V CER DISC	ERIE	801	2
C4	102470	47pF 500V CER DISC	ERIE	801	–
C5	102222	2n2F 500V CER DISC	ERIE	801	1
C6	101103	·01μF 250V CER DISC	ERIE	801	4
C7	120022	1nSF 20% 100v POLYCARB	WIMA	FKC2 MIN	1
C8	120014	2·2μF 10% 63V POLYCARB	ASHCROFT	A2B2221B	2
C9	120014	2·2μF " " "	"	"	–
C10	110013	0·1μF 10% 250V POLYESTER	MULLARD	C280AE/P100K	2
C11	150001	22μF 20% 16V DIP TANT	UNION CARBIDE	K22E1G	2
C12	101103	·01μF 250V CER DISC	ERIE	801	–
C13	150001	22μF 20% 16V DIP TANT	UNION CARBIDE	K22E1G	–
C14	101103	·01μF 250V CER DISC	ERIE	801	–
C15	102100	10pF 500V CER DISC	"	"	2
C16	102100	10pF " " "	"	"	–
C17	102102	1nF " " "	"	"	1
C18	120021	0·47μF 10% 63V POLYCARB	ASHCROFT	A2B4711B	1
C19	150014	680nF 20% 35V DIP TANT	UNION CARBIDE	KR6BE35	1
C20	150016	1μF 20% 35V DIP TANT	UNION CARBIDE	K1R0E35	1
C21	150020	10μF 20% 25V DIP TANT	UNION CARBIDE	K10E25	2
C22	101103	·01μF 250V CER DISC	ERIE	801	–
C23	150020	10μF 20% 25V DIP TANT	UNION CARBIDE	K10E25	–

NOTES.

SEE SHEET 2 FOR LATEST ISSUE

ISS													
ECO													
DATE													
CHKD													

DATE 10-10-78 | datron ELECTRONICS LTD

DRAWN B.J. | CHECKED | APPROVED | DATE

TITLE 1061 OHMS PCB ASSY

DRAWING NUMBER 400331 | SHEET 6 OF 12

DESIGNATOR	DATRON PART No.	DESCRIPTION	PRINCIPAL MANUFACTURER	MANUFACTURER'S PART No.	No. USED Per Assy.
C24	102101	100pf 10% 500V Cer Disc	I.T.T	CD10	3
C25	102101	100pf " " " "	"	"	–
C26	102101	100pF " " " "	"	"	–
C27	110013	100nF 20% 250v POLYESTER	MULLARD	C280AE/P100K	–
C28	104025	100nF +80% -20% 50V CER DISC	SIEMENS	B37449.	1
D1	213001	10V 5W ZENER	MOTOROLA	1N5347	4
D2	213001	10V " "	"	"	–
D3		NOT USED			
D4		NOT USED			
D5		NOT USED			
D6		NOT USED			
D7	210027	2V7 400mW ZENER	MULLARD	BZY88C2V7	1
D8	200001	Si G.P.	FAIRCHILD	1N4148	11
D9		NOT USED			
D10	213001	10V 5W ZENER	MOTOROLA	1N5347	–
D11	213001	10V " "	"	"	–
D12	200001	Si G.P.	FAIRCHILD	1N4148	–
D13		NOT USED			
D14	200008	Si LOW LEAKAGE	FAIRCHILD	1N458A	3
D15	200008	Si " "	"	"	–
D16	210075	7V5 400mW ZENER	MULLARD	BZY88C7V5	1
D17	210120	12V 400mW ZENER	"	BZY88C12	1

NOTES.

SEE SHEET 2 FOR LATEST ISSUE

ISS													
ECO													
DATE													
CHKD													

DATE 10-10-78 | datron ELECTRONICS LTD

DRAWN B.J. | CHECKED | APPROVED | DATE

TITLE 1061 OHMS PCB ASSY.

DRAWING NUMBER 400331 | SHEET 7 OF 12

DESIGNATOR	DATRON PART No.	DESCRIPTION	PRINCIPAL MANUFACTURER	MANUFACTURER'S PART No.	No. USED Per Assy
D18	200001	Si G.P.	FAIRCHILD	IN4148	–
D19	200001	Si "	"	"	–
D20	200001	Si "	"	"	–
D21	200001	Si "	"	"	–
D22	200001	Si "	"	"	–
D23	200001	Si "	"	"	–
D24		NOT USED			
D25	200001	Si "	"	"	–
D26	200001	Si "	"	"	–
D27	200001	Si GP.	"	"	–
D28	200008	Si Low Leakage	"	IN458A	–
Q1	230027	N-CHAN J FET SELECTED	TELEDYNE	U3114E	7
Q2	230027	" " "	"	"	–
Q3	230027	" "	"	"	–
Q4	230027	" "	"	"	–
Q5	230002	N-CHAN J FET	SILICONIX	U1994E	6
Q6	230027	N-CHAN J FET SELECTED	TELEDYNE	U3114E	–
Q7	230027	" " "	"	"	–
Q8	230002	N-CHAN J FET	SILICONIX	U1994E	–
Q9	230002	" "	"	"	–
Q10	240017	Si NPN SUPERMATCH PAIR	NATIONAL	LM394	1
Q11	230029	N-CHAN J FET	SILICONIX	J309	4

NOTES

SEE SHEET 2 FOR LATEST ISSUE

ISS												
BY												
DATE												
CHKD												

DATE 10-10-78 datron ELECTRONICS LTD

DRAWN B.J. TITLE 1061 OHMS PCB ASSY.

CHECKED

APPROVED DATE

DRAWING NUMBER 400331 SHEET 8 OF 12

DESIGNATOR	DATRON PART No.	DESCRIPTION	PRINCIPAL MANUFACTURER	MANUFACTURER'S PART No.	No. USED Per Assy
Q12		NOT USED			
Q13	240012	Si NPN	NATIONAL	2N3053	1
Q14	230027	N-CHAN J FET	TELEDYNE	U3114E	–
Q15	250001	Si PNP	NATIONAL	BC214	2
Q16	250011	Si PNP	NATIONAL	BC327	1
Q17	240001	Si NPN	NATIONAL	BC184	2
Q18	240001	Si NPN	NATIONAL	BC184	–
Q19	250001	Si PNP	NATIONAL	BC214	–
Q20	230002	N-CHAN J FET	SILICONIX	U1994E	–
Q21	230029	N-CHAN J FET	SILICONIX	J309	–
Q22	230029	N-CHAN J FET	SILICONIX	J309	–
Q23	230002	" "	"	U1994E	–
Q24	230002	" "	"	"	–
Q25	230029	" "	"	J309	–

NOTES

SEE SHEET 2 FOR LATEST ISSUE

ISS												
BY												
DATE												
CHKD												

DATE 10-10-78 datron ELECTRONICS LTD

DRAWN B.J. TITLE 1061 OHMS P.C.B. ASSY.

CHECKED

APPROVED DATE

DRAWING NUMBER 400331 SHEET 9 OF 12

DESIGNATOR	DATRON PART No	DESCRIPTION	PRINCIPAL MANUFACTURER	MANUFACTURER'S PART No	No USED Per Assy
M1	280022	QUAD BILATERIAL SWITCH	MOTOROLA	MC 14016 BCP	2
M2	280022	" " "	"	"	—
M3	260069	411 OP AMP	NATIONAL	LF411CH	1
M4	260026	OP AMP	NATIONAL	LM212	1
M5	280025	QUAD ANALOGUE SWITCH	MOTOROLA	MC 14066 BCP	1
M6	280072	M'STABLE / ASTABLE M'VIBR	R.C.A	CD 4047 AE	1
M7	280015	QUAD LATCH	MOTOROLA	MC 14076 BCP	2
M8	280015	" "	"	"	—
M9	280011	DUAL D FLIP FLOP	MOTOROLA	MC 14013 BCP	1

NOTES.

SEE SHEET 2 FOR LATEST ISSUE

ISS													
E.C.O.													
DATE													
CHKD.													

DATE 6-12-78
DRAWN B.J.
CHECKED
APPROVED
DATE

datron ELECTRONICS LTD.

TITLE 1061 OHMS PCB ASSY

DRAWING NUMBER 400331

SHEET 10 OF 12

J.W. 1164

DESIGNATOR	DATRON PART No	DESCRIPTION	PRINCIPAL MANUFACTURER	MANUFACTURER'S PART No	No USED Per Assy
RL1	330019	RELAY 4P 2W 7v HOLD-IN	P&B	SEE DRAWING	1
	400379/2	WIRE / TERMINAL ASSY			6
	410099-6	OHMS PCB.			1
	459112	RELAY BRACKET.	KDP		1
	512999	7/0·2 PTFE INSULATED WHITE.		TYPE C	280mm.
	540002	22 SWG TINNED COPPER WIRE			A/R
	590001	SLEEVE MAX CABLE Ø 3·0	HELLERMANN ELECTRIC	H15 x 20mm BLK HELSYN	9
	590055	SLEEVE Ø 1·0 SIL. RUBBER	HELLERMANN ELECTRIC	H15 CONT. BLACK	20mm
	590004	PTFE SLEEVE			A/R
	602001	F.S.V. TERMINAL	MOLEX	02-04-1875	4
	571095/C	16 WAY AP/3M RIBBON CABLE	DATRON		1
	605060	14 WAY DIL SOCKET	ASTRALUX	ICL-143-S3T	5
	605061	16 WAY DIL SOCKET	ASTRALUX	ICL-163-S6T	2
J1	605053	12 WAY POLARISED SOCKET	MOLEX	22-01-2125	1

NOTES.

J1

SEE SHEET 2 FOR LATEST ISSUE

ISS													
E.C.O.													
DATE													
CHKD.													

DATE 10-10-78
DRAWN B.J.
CHECKED
APPROVED
DATE

datron ELECTRONICS LTD.

TITLE 1061 OHMS PCB ASSY.

DRAWING NUMBER 400331

SHEET 11 OF 12

J.W. 1164

DESIGNATOR	DATRON PART No.	DESCRIPTION	PRINCIPAL MANUFACTURER	MANUFACTURER'S PART No.	No. USED Per Assy.
	G11004	SCREW M3 X 6mm STEEL POZIPAN ZINC PLATED . GKN.			1
	G13005	WASHER M3 INT/SHAKEPROOF	GKN DISTRIBUTORS	ZINC PLATED	2
	G15002	NUT M3 FULL HEX STEEL		ZINC PLATED	1
	G15005	NUT 3-48 UNC FULL HEX	STEEL	" "	1
	G17010	NYLATCH PLUNGER HN3P	ORDER FROM C.J. FOX & SONS.	HN3P-32-4-1	4
	G17011	NYLATCH GROMMET HN3G		HN3G-32-1	4
	G18002	TO5 MOUNTING PAD	JERMYN	TO518-0040	1
	G20003	SOLDER PCB TERMINAL LUG	HARWIN	H2105A	8
	G30024	STANDARD STEATITE INSUL BEAD	PARK ROYAL PORCELAIN Co	TYPE No 2 (16 SWG)	8
	G20007	TEST TERMINAL	MICROVAR	C30	11

NOTES.

SEE SHEET 2 FOR LATEST ISSUE

ISS.													
E.C.O.													
DATE													
CHKD													

DATE 10-10-78	datron ELECTRONICS LTD
DRAWN B.J.	TITLE 1061 OHMS P.C.B ASSY
CHECKED	
APPROVED	
DATE	DRAWING NUMBER 400331 SHEET 12 OF 12

DESIGNATOR	DATRON PART No	DESCRIPTION	PRINCIPAL MANUFACTURER	MANUFACTURER'S PART No	No. USED Per Assy
R1	000103	10k 5% ¼W CARBON	MULLARD	CR25	1
R2	000104	100k 5% ¼W CARBON	MULLARD	CR25	4
R3	000104	100k 5% ¼W CARBON	MULLARD	CR25	–
R4	000104	100k 5% ¼W CARBON	MULLARD	CR25	–
R5	000104	100k 5% ¼W CARBON	MULLARD	CR25	–
AN1	090017	100k x 7 2% NETWORK	BECKMAN	764-1-R100k	2
AN2	090017	100k x 7 2% NETWORK	BECKMAN	764-1-R100k	–
C1	150002	10µF 20% 16 V DIP TANT.	UNION CARBIDE	K10E16	1
C2	150005	2µ2F 20% 16V DIP TANT.	UNION CARBIDE	K2R2E16	1
C3	150008	470nF 20% 35V DIP TANT.	UNION CARBIDE	KR47E35	1
C4	110005	10nF 20% 250v POLYESTER	MULLARD	C280AE P10K	1
C5	150016	1µF 20% 35V DIP. TANT.	UNION CARBIDE	K1R0E35	5
C6	150016	1µF 20% 35V DIP. TANT.	UNION CARBIDE	K1R0E35	–
C7	150016	1µF 20% 35V DIP. TANT.	UNION CARBIDE	K1R0E35	–
C8	150016	1µF 20% 35V DIP. TANT.	UNION CARBIDE	K1R0E35	–
C9	150016	1µF 20% 35V DIP. TANT.	UNION CARBIDE	K1R0E35	–

NOTES

SEE SHEET 2 FOR LATEST ISSUE

ISS	1	2	3	4	5	6	7	8	9	10	11
ECO	RELEASED	1078	1093	1137	1165	1198	1217	1246	1253	1403	1592
DATE	1.2.80	22.2.80	26.3.80	28.7.80	16.12.80	25.2.81	18.6.81	4.11.81	3.12.81	24.11.82	2.5.84
CHKD	MD	A.J.	A.J.	AP	MD	MD	MD	MD	MD	MD	MD

DATE	1.2.80
DRAWN	IL
CHECKED	MD
APPROVED	
DATE	

datron ELECTRONICS LTD

TITLE: 1061 BCD/PROG. PCB. ASSY

DRAWING NUMBER: 400332 — SHEET 2 OF 4

DESIGNATOR	DATRON PART No	DESCRIPTION	PRINCIPAL MANUFACTURER	MANUFACTURER'S PART No	No. USED Per Assy
D1	200001	75mA 75V GP Si. DIODE	FAIRCHILD	IN4148	1
M1	280081	PERIPHERAL INTERFACE ADAPTOR	MOTOROLA	MC6821P	1
M2	290003	555 TIMER	FAIRCHILD	µA555TC	1
M3	270050	HEX INVERTOR LS	NATIONAL	DM74LS04N	2
M4	270048	QUAD 2 I/P NAND LS	NATIONAL	DM74LS00N	1
M5	270051	DUAL 4 I/P AND LS	NATIONAL	DM74LS21N	1
M6	270050	HEX INVERTOR LS	NATIONAL	DM74LS04N	–
M7	280015	QUAD D-TYPE LATCH	MOTOROLA	MC14076BCP	9
M8	280015	QUAD D-TYPE LATCH	MOTOROLA	MC14076BCP	–
M9	280015	QUAD D-TYPE LATCH	MOTOROLA	MC14076BCP	–
M10	280015	QUAD D-TYPE LATCH	MOTOROLA	MC14076BCP	–
M11	290080-19	2716 EPROM PROGRAMMED	DATRON	IB2716(290080-ISS)	1
M12	280015	QUAD D-TYPE LATCH	MOTOROLA	MC14076BCP	–
M13	280015	QUAD D-TYPE LATCH	MOTOROLA	MC14076BCP	–
M14	280015	QUAD D-TYPE LATCH	MOTOROLA	MC14076BCP	–
M15	280015	QUAD D-TYPE LATCH	MOTOROLA	MC14076BCP	–
M16	280015	QUAD D-TYPE LATCH	MOTOROLA	MC14076BCP	–
M17	280024	TRI-STATE HEX. BUFFER	MOTOROLA	MC14503BCP	9
M18	280024	TRI-STATE HEX. BUFFER	MOTOROLA	MC14503BCP	–
M19	280024	TRI-STATE HEX. BUFFER	MOTOROLA	MC14503BCP	–
M20	280024	TRI-STATE HEX. BUFFER	MOTOROLA	MC14503BCP	–
M21	280024	TRI-STATE HEX. BUFFER	MOTOROLA	MC14503BCP	–

NOTES.

SEE SHEET 2 FOR LATEST ISSUE

ISS											
ECO											
DATE											
CHKD											

DATE	1.2.80
DRAWN	IL
CHECKED	
APPROVED	
DATE	

datron ELECTRONICS LTD

TITLE: 1061 BCD/PROG. PCB. ASSY

DRAWING NUMBER: 400332 — SHEET 3 OF 4

DESIGNATOR	DATRON PART No.	DESCRIPTION	PRINCIPAL MANUFACTURER	MANUFACTURER'S PART No.	No. USED Per Assy.
M22	280066	256 x 4 BIT STATIC CMOS RAM	SEE DRAWING		2
M23	280066	256 x 4 BIT STATIC CMOS RAM	SEE DRAWING		-
M24	280024	TRI-STATE HEX. BUFFER	MOTOROLA	MC14503 BCP	-
M25	280024	TRI-STATE HEX. BUFFER	MOTOROLA	MC14503 BCP	-
M26	280024	TRI-STATE HEX. BUFFER	MOTOROLA	MC14503 BCP	-
M27	280024	TRI-STATE HEX. BUFFER	MOTOROLA	MC14503 BCP	-
	620007	TEST POINT TERMINAL	MICROVAR	C 30	9
J3	605051	4 WAY POLARISED SOCKET	MOLEX	(22-01-2045) 6471-4-1	1
J1 J2	605102	24 WAY DIL. SOCKET GOLD	CA	CA 24S 10SD	2
	605064	24 WAY DIL. SOCKET	AUGAT	324-AG39D	1
	605060	14 WAY DIL. SOCKET	ASTRALUX OR JERMYN	ICL 143 S3T	4
	605061	16 WAY DIL. SOCKET	ASTRALUX OR JERMYN	ICL 163-S6T	18
J5	573120/C	24WAY AP/3M RIBBON CABLE	DATRON		1
	605050	40 WAY DIL. SOCKET	AUGAT	340-AG39D	1
	605059	8 WAY DIL. SOCKET	ASTRALUX	ICL-083-S6T	1
	605063	22 WAY DIL. SOCKET	AUGAT	322-AG39D	2
J4	605002	16 WAY DIL. SOCKET	ASTRALUX	ICN-163-S3G	1
	606005	SOCKET CLIP	ASTRALUX	RC-74	1
	605056	CRIMP TERMINAL	MOLEX	4809-TL	1
	400379/1	WIRE/TERMINAL ASSY			3
	410100-4A	PCB			1

NOTES.

SEE SHEET 2 FOR LATEST ISSUE

ISS.													
E.C.O.													
DATE													
CHKD.													

DATE	1.2.80
DRAWN	IL
CHECKED	
APPROVED	
DATE	

datron ELECTRONICS LTD

TITLE: 1061 BCD/PROG. PCB. ASSY.

DRAWING NUMBER: 400332 SHEET 4 OF 4

DESIGNATOR	DATRON PART No.	DESCRIPTION	PRINCIPAL MANUFACTURER	MANUFACTURER'S PART No.	No. USED Per Assy.
R	000123	12K 5% ¼W CARBON	MULLARD	CR25	2
R2		NOT USED			–
R3	000332	3K3 5% ¼W CARBON.	MULLARD	CR25	3
R4		NOT USED			–
R5	000123	12K 5% ¼W. CARBON.	MULLARD	CR25	–
R6	000222	2K2 5% ¼W CARBON.	MULLARD	CR25	1
R7		NOT USED			–
R8		NOT USED			–
R9		NOT USED.			–
R10	000562	5K6 5% ¼W CARBON	MULLARD	CR25	1
R11	000103	10K 5% ¼W CARBON	MULLARD	CR25	4
R12	000105	1M 5% ¼W CARBON.	MULLARD	CR25	1
R13		NOT USED			–
R14	000103	10k 5% ¼W CARBON	MULLARD	CR25	–
R15		NOT USED			–
R16	000332	3k3 5% ¼W CARBON	MULLARD	CR25	–
R17		NOT USED			–
R18	000681	680R 5% ¼W CARBON	MULLARD	CR25	1
R19	000332	3k3 5% ¼W CARBON	MULLARD	CR25	–
R20	000103	10k 5% ¼W CARBON	MULLARD	CR25	–
R21	000103	10K 5% ¼W CARBON	MULLARD	CR25	–

NOTES.

SEE SHEET 3 FOR LATEST ISSUE

ISS	A	1	2 C	3	4	5	6	7	8
ECO		REL To Prod	272/395	581	1054	1085	1167	1199	1328
DATE	9 MAY 79	17 MAY 79	25 OCT 79	6 NOV 79	2 JAN 80	22.4.80	23.9.80	24.2.81	12.5.82
CHKD			NO	NO	NO	NO	NO	NO	NO

DATE 9 MAY 79
DRAWN W.G. SMITH
CHECKED
APPROVED
DATE 17 MAY 79

datron ELECTRONICS LTD

TITLE REAR INPUT ASSY. 1061/71

DRAWING NUMBER 400386 SHEET 3 OF 8.

JW 1164

DESIGNATOR	DATRON PART No.	DESCRIPTION	PRINCIPAL MANUFACTURER	MANUFACTURER'S PART No.	No. USED Per Assy.
C1	150022	2µ2F. 20% 35v. DIP. TANT.	UNION CARBIDE	K2R2E35	1
C2		NOT USED			–
C3		NOT USED			–
C4	150020	10µF 20% 25V. DIP. TANT.	UNION CARBIDE	K10E25	1
C5	102101	100pF 10% 500v. CER. DISC	ITT	CD10	1
C6	110013	100nF 20% 250v. POLYESTER	MULLARD	C280AE P100K	1
C7	150014	680nF 20% 35v DIP TANT	UNION CARBIDE	KR68E35	1

NOTES.

SEE SHEET 3 FOR LATEST ISSUE

ISS									
ECO									
DATE									
CHKD									

DATE 23.9.80
DRAWN
CHECKED
APPROVED
DATE

datron ELECTRONICS LTD

TITLE REAR INPUT ASSY 1061/1071

DRAWING NUMBER 400386 SHEET 4 OF 8

JW 1164

DESIGNATOR	DATRON PART No.	DESCRIPTION	PRINCIPAL MANUFACTURER	MANUFACTURER'S PART No.	No. USED Per Assy
D1	200001	75mA 75V GP Si DIODE	FAIRCHILD	IN4148	5
D2		NOT USED			–
D3	200001	75mA 75V GP Si DIODE	FAIRCHILD	IN4148	–
D4		NOT USED			–
D5	200001	75mA 75V GP Si DIODE	FAIRCHILD	IN4148	–
D6	200001	75mA 75V GP Si DIODE	FAIRCHILD	IN4148	–
D7	200001	75mA 75V GP Si DIODE	FAIRCHILD	IN4148	–
Q1	240001	Si NPN TRANSISTOR	NATIONAL	BC184/TO18	2
Q2		NOT USED			–
Q3	250001	Si PNP TRANSISTOR	NATIONAL	BC214/TO18	1
Q4		NOT USED.			–
Q5		NOT USED			–
Q6	240001	Si NPN TRANSISTOR	NATIONAL	BC184/TO18	–
M1	280011	DUAL D FLIP-FLOP	MOTOROLA	MC14013 BCP	1
J1	604036	CON. PIN STRIP OF 10 HORIZ TYPE	AMP	163740-8	2
J2, J3	605052	8WAY POLARISED SOCKET	MOLEX	(22-01-2085) 6471-8-1	2

NOTES

SEE SHEET 3 FOR LATEST ISSUE

ISS	ECO	DATE	CHKD

DATE 9 MAY 79
DRAWN W.G.SMITH
CHECKED MSD
APPROVED
DATE 17 MAY 79

datron ELECTRONICS LTD

TITLE REAR INPUT ASSY 1061/71

DRAWING NUMBER 400386 SHEET 5 OF 8

DESIGNATOR	DATRON PART No.	DESCRIPTION	PRINCIPAL MANUFACTURER	MANUFACTURER'S PART No.	No. USED Per Assy
J4 & J6	604033	FLAT WAFER PIN (4 WAY GOLD)	MOLEX	22-27-2041/GOLD	3
J5	605051	4WAY POLARISED SOCKET	MOLEX	22-01-2045	1
	400379/4	WIRE/TERMINAL ASSY	HOLDEN CORDS		6
	400379/5	WIRE/TERMINAL ASSY	HOLDEN CORDS		4
RL1	330018	RELAY 2P2W 7v HOLD-IN	P&B	SEE DRAWING	1
RL2	330019	RELAY 4P2W 7v HOLD-IN	P&B	SEE DRAWING	1
RL3 & RL4		NOT USED.			
	410106-5	COMPONENT P.C.B			1
	410132-2	RELAY P.C.B.			1
	450257-1	SOCKET PLATE			1
	450241-1	RELAY BRACKET			1
	540002	22SWG TINNED COPPER WIRE			A/R
	540008	7/.2 PTFE INS. WHITE WIRE			140mm

NOTES.

SEE SHEET 3 FOR LATEST ISSUE

ISS	ECO	DATE	DRAWN	CHKD

DATE 9 MAY 79
DRAWN W.G.SMITH
CHECKED MSD
APPROVED
DATE 17 MAY 79

datron ELECTRONICS LTD

TITLE REAR INPUT ASSY 1061/71

DRAWING NUMBER 400386 SHEET 6 OF 8

DESIGNATOR	DATRON PART No.	DESCRIPTION	PRINCIPAL MANUFACTURER	MANUFACTURER'S PART No.	No. USED Per Assy
	590001	SLEEVE. MAX CABLE Ø 3.0MM	HELLERMAN ELECTRIC	HIS×20MM BLK HELSYN	17
	590004	SLEEVE — PTFE	HELLERMAN ELECTRIC	FE10	30MM
J11	604008	7 WAY PLUG PANEL MTG	PYE CONNECTORS	M7P	1
	605009	7 WAY SOCKET	PYE CONNECTORS	M7S	1
	605057	CRIMP TERMINAL	MOLEX	4809-GL	2
	606001	LOCKING HOOD	PYE CONNECTORS	M HN	1
	606002	NUT	PYE CONNECTORS	M N	1
	606003	WASHER	PYE CONNECTORS	M LW	1
	605060	14 WAY DIL SOCKET	ASTRALUX OR JERMYN	ICN-246-54T or A23-2023Y	1
	611004	SCREW M3×6MM STEEL POSI-PAN	G.K.N	ZINC PLATED	7
	611007	SCREW M3×6MM STEEL POSI-CSK.	G.K.N	ZINC PLATED	7
	611016	SCREW M3×8MM STEEL POSI-PAN	G.K.N	ZINC PLATED.	4
	612020	STAND-OFF NYLON M3×10 TRANSPILLAR.	W.K. ELECTRONICS.	TPI/6S/10/M3/I/I	5

NOTES

SEE SHEET 3 FOR LATEST ISSUE

ISS													
ECO													
DATE													
CHKD													

DATE 9 MAY 79
DRAWN W.G.SMITH
CHECKED MOD
APPROVED
DATE 17 MAY 79

datron ELECTRONICS LTD

TITLE REAR INPUT ASSY 1061/71

DRAWING NUMBER 400386 SHEET 7 OF 8

W 1164

DESIGNATOR	DATRON PART No.	DESCRIPTION	PRINCIPAL MANUFACTURER	MANUFACTURER'S PART No.	No. USED Per Assy
	613005	WASHER M3 INT SHAKEPROOF ST.	GKN DISTRIBUTORS	ZINC PLATED	13
	615001	NUT BBA FULL HEX STEEL		ZINC PLATED	2
	615002	NUT M3 FULL HEX STEEL		ZINC PLATED	2
	700069	DPDT SLIDE SWITCH	WAYCOM	S-5022 CD03-0+¾ TRIGGER & STYLE 2 C P.C.B MOUNT CONTACTS	1

NOTES

SEE SHEET 3 FOR LATEST ISSUE

ISS													
ECO													
DATE													
CHKD													

DATE 9 MAY 79
DRAWN W.G.SMITH
CHECKED MOD
APPROVED
DATE 17 MAY 79

datron ELECTRONICS LTD

TITLE REAR INPUT ASSY 1061/71

DRAWING NUMBER 400386 SHEET 8 OF 8

JW 1164

DESIGNATOR	DATRON PART No.	DESCRIPTION	PRINCIPAL MANUFACTURER	MANUFACTURER'S PART No.	No. USED Per Assy.
R1	090054	8k2 ·25% 10ppm MF	ACI	SEE DRG	1
R2	011181	1K18 1% 1/8W 50ppm MF	HOLCO	H8C	1
R3	015900	590R 1% 1/8W 50ppm MF	HOLCO	H8C	1
R4	012940	294R 1% 1/8W 50ppm MF	HOLCO	H8C	2
R5	011470	147R 1% 1/8W 50ppm MF	HOLCO	H8C	1
R6	090054	16k ·25% 10ppm MF	ACI	SEE DRG	–
R7 *	000434	430k 5% 1/4W CARBON	MULLARD	CR25	1
R8	000394	390k 5% 1/4W CARBON	MULLARD	CR25	1
R9	000103	10k 5% 1/4W CARBON	MULLARD	CR25	5
R10	000155	1M5 5% 1/4W CARBON	MULLARD	CR25	2
R11	000105	1M 5% 1/4W CARBON	MULLARD	CR25	5
R12	000152	1K5 5% 1/4W CARBON	MULLARD	CR25	1
R13	000224	220k 5% 1/4W CARBON	MULLARD	CR25	1
R14	000333	33k 5% 1/4W CARBON	MULLARD	CR25	3
R15	000104	100k 5% 1/4W CARBON	MULLARD	CR25	6
R16	000685	6M8 5% 1/4W CARBON	MULLARD	CR25	1
R17	000332	3k3 5% 1/4W CARBON	MULLARD	CR25	5
R18	090053	100k ·25% 10ppm MF	ACI	SEE DRG	1
R19	090053	100k ·25% 10ppm MF	ACI	SEE DRG	–
R20	000274	270K CARBON (DO NOT SOLDER)	MULLARD	CR25	1
R21	000821	820R 5% 1/4W CARBON	MULLARD	CR25	1
R22	290026	RMS KIT	DATRON	SEE DRG	1
R23	000270	27R 5% 1/4W CARBON	MULLARD	CR25	1

NOTES. * NOT USED ON ASSEMBLIES FITTED INTO 1061's

SEE SHEET 2 FOR LATEST ISSUE

ISS	22	22											
ECO	1730	1801											
DATE	23.10.84	2.1.85											
CHKD	BD	AP											

DATE 17.8.79
DRAWN IL
CHECKED RLW
APPROVED
DATE

datron ELECTRONICS LTD

TITLE AC PCB ASSY

DRAWING NUMBER 400402 SHEET 2 OF 17

DESIGNATOR	DATRON PART No.	DESCRIPTION	PRINCIPAL MANUFACTURER	MANUFACTURER'S PART No.	No. USED Per Assy.
R24	000107	100M 10% 1/4W CARBON	ALLEN BRADLEY	CB10	3
R25	000331	330R 5% 1/4W CARBON	MULLARD	CR25	2
R26	000154	150K 5% 1/4W CARBON	MULLARD	CR25	2
R27	000334	330k 5% 1/4W CARBON	MULLARD	CR25	1
R28	290026	RMS KIT	DATRON	SEE DRG	–
R29	000221	220R 5% 1/4W CARBON	MULLARD	CR25	4
R30	000680	68R 5% 1/4W CARBON	MULLARD	CR25	3
R31	000561	560R 5% 1/4W CARBON	MULLARD	CR25	2
R32	000182	1K8 5% 1/4W CARBON	MULLARD	CR25	2
R33	000333	33k 5% 1/4W CARBON	MULLARD	CR25	–
R34	000103	10k 5% 1/4W CARBON	MULLARD	CR25	–
R35	063500	50R POT 3/8"SQ. CERMET	BECKMAN	72P	2
R36	049093	909K 1% 1/2W 100ppm CF	ALLEN BRADLEY	CC	1
R37	000222	2k2 5% 1/4W CARBON	MULLARD	CR25	3
R38	000124	120k 5% 1/4W CARBON	MULLARD	CR25	1
R39	000104	100k 5% 1/4W CARBON	MULLARD	CR25	–
R40	000103	10k 5% 1/4W CARBON	MULLARD	CR25	–
R41	000332	3k3 5% 1/4W CARBON	MULLARD	CR25	–
R42	000332	3k3 5% 1/4W CARBON	MULLARD	CR25	–
R43	000332	3k3 5% 1/4W CARBON	MULLARD	CR25	–
R44	000331	330R 5% 1/4W CARBON	MULLARD	CR25	–
R45	000680	68R 5% 1/4W CARBON	MULLARD	CR25	–
R46	000472	4K7 5% 1/4W CARBON	MULLARD	CR25	1

NOTES.

SEE SHEET 2 FOR LATEST ISSUE

ISS													
ECO													
DATE													
CHKD													

DATE 17.8.79
DRAWN IL
CHECKED RLW
APPROVED
DATE

datron ELECTRONICS LTD

TITLE AC PCB ASSY

DRAWING NUMBER 400402 SHEET 3 OF 17

DESIGNATOR	DATRON PART No.	DESCRIPTION	PRINCIPAL MANUFACTURER	MANUFACTURER'S PART No.	No. USED Per Assy.
R47	090051	4K7 ·25% 10ppm MF	ACI	SEE DRG	1
R48	090053	8K975·25% 10ppm MF	ACI	SEE DRG	—
R49	000912	9K1 5% 1/4W CARBON	MULLARD	CR25	1
R50	063500	50R POT 3/8"SQ CERMET	BECKMAN	72P	—
R51	000107	100M 10% 1/4W CARBON	ALLEN BRADLEY	CB10	—
R52	000122	1K2 5% 1/4W CARBON	MULLARD	CR25	1
R53	000333	33K 5% 1/4W CARBON	MULLARD	CR25	—
R54	000123	12K 5% 1/4W CARBON	MULLARD	CR25	1
R55	000681	680R 5% 1/4W CARBON	MULLARD	CR25	1
R56	000103	10K 5% 1/4W CARBON	MULLARD	CR25	—
R57	000105	1M 5% 1/4W CARBON	MULLARD	CR25	—
R58	000104	100K 5% 1/4W CARBON	MULLARD	CR25	—
R59	000120	12R 5% 1/4W CARBON	MULLARD	CR25	2
R60	000120	12R 5% 1/4W CARBON	MULLARD	CR25	—
R61	000222	2K2 5% 1/4W CARBON	MULLARD	CR25	—
R62	000332	3K3 5% 1/4W CARBON	MULLARD	CR25	—
R63	008060	680R 5% 1/5W CARBON	MULLARD	CR16	1
R64	000222	2K2 5% 1/4W CARBON	MULLARD	CR25	—
R65	000101	100R 5% 1/4W CARBON	MULLARD	CR25	4
R66	000221	220R 5% 1/4W CARBON	MULLARD	CR25	—
R67	000183	18K 5% 1/4W CARBON	MULLARD	CR25	1
R68	090053	18K ·25% 10ppm MF	ACI	SEE DRG	—
R69	090051	4K7 ·25% 10ppm MF	ACI	SEE DRG	—

NOTES

SEE SHEET 2 FOR LATEST ISSUE

ISS																	
ECO																	
DATE																	
CHKD																	

DATE 17.8.79
DRAWN IL
CHECKED RIW
APPROVED
DATE

datron ELECTRONICS LTD

TITLE AC PCB ASSY

DRAWING NUMBER 400402 SHEET 4 OF 17

DESIGNATOR	DATRON PART No.	DESCRIPTION	PRINCIPAL MANUFACTURER	MANUFACTURER'S PART No.	No. USED Per Assy.
R70	000272	2K7 5% 1/4W CARBON	MULLARD	CR25	2
R71	000272	2K7 5% 1/4W CARBON	MULLARD	CR25	—
R72	000330	33R 5% 1/4W CARBON	MULLARD	CR25	1
R73	000105	1M 5% 1/4W CARBON	MULLARD	CR25	—
R74	000824	820K 5% 1/4W CARBON	MULLARD	CR25	1
R75	063504	500K POT 3/8"SQ CERMET	BECKMAN	72P	2
R76	090067	62K6 ·25% 10ppm MF	ACI	SEE DRG	1
R77	000104	100K 5% 1/4W CARBON	MULLARD	CR25	—
R78	000225	2M2 5% 1/4W CARBON	MULLARD	CR25	2
R79	011103	110K 1% 1/8W MF	HOLCO	H8C	1
R80	000561	560R 5% 1/4W CARBON	MULLARD	CR25	—
R81	000101	100R 5% 1/4W CARBON	MULLARD	CR25	—
R82	000101	100R 5% 1/4W CARBON	MULLARD	CR25	—
R83	000104	100K 5% 1/4W CARBON	MULLARD	CR25	—
R84	000184	180K 5% 1/4W CARBON	MULLARD	CR25	3
R85	000184	180K 5% 1/4W CARBON	MULLARD	CR25	—
R86	000103	10K 5% 1/4W CARBON	MULLARD	CR25	—
R87	000153	15K 5% 1/4W CARBON	MULLARD	CR25	3
R88	000680	68R 5% 1/4W CARBON	MULLARD	CR25	—
R89	000221	220R 5% 1/4W CARBON	MULLARD	CR25	—
R90	063204	200K POT 3/8"SQ. CERMET	BECKMAN	72P	1
R91	000105	1M 5% 1/4W CARBON	MULLARD	CR25	—
R92	000105	1M 5% 1/4W CARBON	MULLARD	CR25	—

NOTES

SEE SHEET 2 FOR LATEST ISSUE

ISS																	
ECO																	
DATE																	
CHKD																	

DATE 17.8.79
DRAWN IL
CHECKED RIW
APPROVED
DATE

datron ELECTRONICS LTD

TITLE AC PCB ASSY

DRAWING NUMBER 400402 SHEET 5 OF 17

DESIGNATOR	DATRON PART No.	DESCRIPTION	PRINCIPAL MANUFACTURER	MANUFACTURER'S PART No.	No. USED Per Assy.
R1	090054	8k2 ·25% 10ppm MF	ACI	SEE DRG	1
R2	011181	1k18 1% 1/8W 50ppm MF	HOLCO	H8C	1
R3	015900	590R 1% 1/8W 50ppm MF	HOLCO	H8C	1
R4	012940	294R 1% 1/8W 50ppm MF	HOLCO	H8C	2
R5	011470	147R 1% 1/8W 50ppm MF	HOLCO	H8C	1
R6	090054	16k ·25% 10ppm MF	ACI	SEE DRG	–
R7 *	000434	430k 5% 1/4W CARBON	MULLARD	CR25	1
R8	000394	390k 5% 1/4W CARBON	MULLARD	CR25	1
R9	000103	10k 5% 1/4W CARBON	MULLARD	CR25	5
R10	000155	1M5 5% 1/4W CARBON	MULLARD	CR25	2
R11	000105	1M 5% 1/4W CARBON	MULLARD	CR25	5
R12	000152	1k5 5% 1/4W CARBON	MULLARD	CR25	1
R13	000224	220k 5% 1/4W CARBON	MULLARD	CR25	1
R14	000333	33k 5% 1/4W CARBON	MULLARD	CR25	3
R15	000104	100k 5% 1/4W CARBON	MULLARD	CR25	6
R16	000685	6M8 5% 1/4W CARBON	MULLARD	CR25	1
R17	000332	3k3 5% 1/4W CARBON	MULLARD	CR25	5
R18	090053	100k ·25% 10ppm MF	ACI	SEE DRG	1
R19	090053	100k ·25% 10ppm MF	ACI	SEE DRG	–
R20	000274	270K CARBON (DO NOT SOLDER)	MULLARD	CR25	1
R21	000821	820R 5% 1/4W CARBON	MULLARD	CR25	1
R22	290026	RMS KIT	DATRON	SEE DRG	1
R23	000270	27R 5% 1/4W CARBON	MULLARD	CR25	1

NOTES. * NOT USED ON ASSEMBLIES FITTED INTO 1061's

SEE SHEET 2 FOR LATEST ISSUE

ISS	22	22												
ECO	1730	1801												
DATE	23.10.84	2.1.85												
CHKD	BD	AD												

DATE 17.8.79
DRAWN IL
CHECKED RLW
APPROVED
DATE

datron ELECTRONICS LTD

TITLE AC PCB ASSY

DRAWING NUMBER 400402 SHEET 2 OF 17

DESIGNATOR	DATRON PART No.	DESCRIPTION	PRINCIPAL MANUFACTURER	MANUFACTURER'S PART No	No. USED Per Assy.
R24	000107	100M 10% 1/4W CARBON	ALLEN BRADLEY	CB10	3
R25	000331	330R 5% 1/4W CARBON	MULLARD	CR25	2
R26	000154	150K 5% 1/4W CARBON	MULLARD	CR25	2
R27	000334	330k 5% 1/4W CARBON	MULLARD	CR25	1
R28	290026	RMS KIT	DATRON	SEE DRG	–
R29	000221	220R 5% 1/4W CARBON	MULLARD	CR25	4
R30	000680	68R 5% 1/4W CARBON	MULLARD	CR25	3
R31	000561	560R 5% 1/4W CARBON	MULLARD	CR25	2
R32	000182	1k8 5% 1/4W CARBON	MULLARD	CR25	2
R33	000333	33k 5% 1/4W CARBON	MULLARD	CR25	–
R34	000103	10k 5% 1/4W CARBON	MULLARD	CR25	–
R35	063500	50R POT 3/8"SQ. CERMET	BECKMAN	72P	2
R36	049093	909K 1% 1/2W 100ppm CF	ALLEN BRADLEY	CC	1
R37	000222	2k2 5% 1/4W CARBON	MULLARD	CR25	3
R38	000124	120k 5% 1/4W CARBON	MULLARD	CR25	1
R39	000104	100k 5% 1/4W CARBON	MULLARD	CR25	–
R40	000103	10k 5% 1/4W CARBON	MULLARD	CR25	–
R41	000332	3k3 5% 1/4W CARBON	MULLARD	CR25	–
R42	000332	3k3 5% 1/4W CARBON	MULLARD	CR25	–
R43	000332	3k3 5% 1/4W CARBON	MULLARD	CR25	–
R44	000331	330R 5% 1/4W CARBON	MULLARD	CR25	–
R45	000680	68R 5% 1/4W CARBON	MULLARD	CR25	–
R46	000472	4k7 5% 1/4W CARBON	MULLARD	CR25	1

NOTES.

SEE SHEET 2 FOR LATEST ISSUE

ISS														
ECO														
DATE														
CHKD														

DATE 17.8.79
DRAWN IL
CHECKED RLW
APPROVED
DATE

datron ELECTRONICS LTD

TITLE AC PCB ASSY

DRAWING NUMBER 400402 SHEET 3 OF 17

DESIGNATOR	DATRON PART No.	DESCRIPTION	PRINCIPAL MANUFACTURER	MANUFACTURER'S PART No.	No. USED Per Assy
R47	090051	4k7 ·25% 10ppm MF	ACI	SEE DRG	1
R48	090053	8k975·25% 10ppm MF	ACI	SEE DRG	—
R49	000912	9k1 5% 1/4W CARBON	MULLARD	CR25	1
R50	063500	50R POT 3/8" SQ. CERMET	BECKMAN	72P	—
R51	000107	100M 10% 1/4W CARBON	ALLEN BRADLEY	CB10	—
R52	000122	1K2 5% 1/4W CARBON	MULLARD	CR25	1
R53	000333	33k 5% 1/4W CARBON	MULLARD	CR25	—
R54	000123	12k 5% 1/4W CARBON	MULLARD	CR25	1
R55	000681	680R 5% 1/4W CARBON	MULLARD	CR25	1
R56	000103	10k 5% 1/4W CARBON	MULLARD	CR25	—
R57	000105	1M 5% 1/4W CARBON	MULLARD	CR25	—
R58	000104	100k 5% 1/4W CARBON	MULLARD	CR25	—
R59	000120	12R 5% 1/4W CARBON	MULLARD	CR25	2
R60	000120	12R 5% 1/4W CARBON	MULLARD	CR25	—
R61	000222	2k2 5% 1/4W CARBON	MULLARD	CR25	—
R62	000332	3k3 5% 1/4W CARBON	MULLARD	CR25	—
R63	008060	680R 5% 1/5W CARBON	MULLARD	CR16	1
R64	000222	2k2 5% 1/4W CARBON	MULLARD	CR25	—
R65	000101	100R 5% 1/4W CARBON	MULLARD	CR25	4
R66	000221	220R 5% 1/4W CARBON	MULLARD	CR25	—
R67	000183	18k 5% 1/4W CARBON	MULLARD	CR25	1
R68	090053	18k ·25% 10ppm MF	ACI	SEE DRG	—
R69	090051	4k7 ·25% 10ppm MF	ACI	SEE DRG	—

NOTES.

SEE SHEET 2 FOR LATEST ISSUE

ISS													
ECO													
DATE													
CHKD													

DATE 17.8.79
DRAWN IL
CHECKED RJW
APPROVED
DATE

datron ELECTRONICS LTD

TITLE AC PCB ASSY

DRAWING NUMBER 400402 SHEET 4 OF 17

DESIGNATOR	DATRON PART No.	DESCRIPTION	PRINCIPAL MANUFACTURER	MANUFACTURER'S PART No.	No. USED Per Assy.
R70	000272	2K7 5% 1/4W CARBON	MULLARD	CR25	2
R71	000272	2K7 5% 1/4W CARBON	MULLARD	CR25	—
R72	000330	33R 5% 1/4W CARBON	MULLARD	CR25	1
R73	000105	1M 5% 1/4W CARBON	MULLARD	CR25	—
R74	000824	820k 5% 1/4W CARBON	MULLARD	CR25	1
R75	063504	500k POT 3/8" SQ CERMET	BECKMAN	72P	2
R76	090067	62K6 ·25% 10ppm MF	ACI	SEE DRG	1
R77	000104	100k 5% 1/4W CARBON	MULLARD	CR25	—
R78	000225	2M2 5% 1/4W CARBON	MULLARD	CR25	2
R79	011103	110k 1% 1/8W MF	HOLCO	H8C	1
R80	000561	560R 5% 1/4W CARBON	MULLARD	CR25	—
R81	000101	100 R 5% 1/4W CARBON	MULLARD	CR25	—
R82	000101	100R 5% 1/4W CARBON	MULLARD	CR25	—
R83	000104	100k 5% 1/4W CARBON	MULLARD	CR25	—
R84	000184	180k 5% 1/4W CARBON	MULLARD	CR25	3
R85	000184	180k 5% 1/4W CARBON	MULLARD	CR25	—
R86	000103	10k 5% 1/4W CARBON	MULLARD	CR25	—
R87	000153	15k 5% 1/4W CARBON	MULLARD	CR25	3
R88	000680	68R 5% 1/4W CARBON	MULLARD	CR25	—
R89	000221	220R 5% 1/4W CARBON	MULLARD	CR25	—
R90	063204	200k POT 3/8" SQ. CERMET	BECKMAN	72P	1
R91	000105	1M 5% 1/4W CARBON	MULLARD	CR25	—
R92	000105	1M 5% 1/4W CARBON	MULLARD	CR25	—

NOTES.

SEE SHEET 2 FOR LATEST ISSUE

ISS													
ECO													
DATE													
CHKD													

DATE 17.8.79
DRAWN IL
CHECKED RJW
APPROVED
DATE

datron ELECTRONICS LTD

TITLE AC PCB ASSY

DRAWING NUMBER 400402 SHEET 5 OF 17

DESIGNATOR	DATRON PART No.	DESCRIPTION	PRINCIPAL MANUFACTURER	MANUFACTURER'S PART No.	No. USED Per Assy.
R93	000225	2M2 5% ¼W CARBON	MULLARD	CR25	—
R94	000564	560K 5% ¼W CARBON	MULLARD	CR25	2
R95	090052	9k ·25% 10ppm MF	ACI	SEE DRG	1
R96	090052	1k ·25% 10ppm MF	ACI	SEE DRG	—
R97	000101	100R 5% ¼W CARBON	MULLARD	CR25	—
R98	000471	470R 5% ¼W CARBON	MULLARD	CR25	1
R99	000182	1K8 5% ¼W CARBON	MULLARD	CR25	—
R100	000184	180k 5% ¼W CARBON	MULLARD	CR25	—
R101	012940	294R 1% ⅛W MF	HOLCO	H8C	—
R102	090067	62k6 ·25% 10ppm MF	ACI	SEE DRG	—
R103	000221	220R 5% ¼W CARBON	MULLARD	CR25	—
R104	000154	150K 5% ¼W CARBON	MULLARD	CR25	—
R105	000564	560K 5% ¼W CARBON	MULLARD	CR25	—
R106	011001	1k00 1% ⅛W 50ppm MF	HOLCO	H8C	3
R107	011823	182k 1% ⅛W 50ppm MF	HOLCO	H8C	1
R108	042215	22M1 1% ½W 100ppm MF	ALLEN BRADLEY	CC	2
R109	090066	1k ·25% 10ppm MF	ACI	SEE DRG.	1
R110	090066	10k1 ·25% 10ppm MF	ACI	SEE DRG	—
R111	090066	111k ·25% 10ppm MF	ACI	SEE DRG	—
R112	063504	500k POT 3/8"SQ CERMET	BECKMAN	72P	—
R113	042215	22M1 1% ½W 100ppm MF	ALLEN BRADLEY	CC	—
R114	090066	1M ·25% 10ppm MF	ACI	SEE DRG	—
R115	000153	15k 5% ¼W CARBON	MULLARD	CR25	—

NOTES

SEE SHEET 2 FOR LATEST ISSUE

ISS													
E.C.O.													
DATE													
CHK'D													

DATE 17.8.79
DRAWN IL
CHECKED RLW
APPROVED
DATE

datron ELECTRONICS LTD

TITLE AC PCB ASSY

DRAWING NUMBER 400402

SHEET 6 OF 17

DESIGNATOR	DATRON PART No.	DESCRIPTION	PRINCIPAL MANUFACTURER	MANUFACTURER'S PART No.	No. USED Per Assy.
R116	000336	33M 10% ¼W CARBON	ALLEN BRADLEY	CB10	1
R117	000102	1k 5% ¼W CARBON	MULLARD	CR25	2
R118	000155	1M5 5% ¼W CARBON	MULLARD	CR25	—
R119	000107	100M 10% ¼W CARBON	ALLEN BRADLEY	CB10	—
R120	000102	1k 5% ¼W CARBON	MULLARD	CR25	—
R121	063105	1M POT 3/8"SQ CERMET	BECKMAN	72P	1
R122	000104	100k 5% ¼W CARBON	MULLARD	CR25	—
R123	090066	277k ·25% 10ppm MF	ACI	SEE DRG	—
R124	090066	277k ·25% 10ppm MF	ACI	SEE DRG	—
R125	090066	277k ·25% 10ppm MF	ACI	SEE DRG	—
R126	090066	277k ·25% 10ppm MF	ACI	SEE DRG	—
R127		NOT USED			—
R128	000476	47M 10% ¼W CARBON	ALLEN BRADLEY	CB10	1
R129	008059	820R 5% ⅓W CARBON	MULLARD	CR16	1
R130		NOT USED			—
R131		" "			—
R132		" "			—
R133	011001	1k00 1% ⅛W 50ppm M/F	HOLCO	H8C	—
R134	011001	1k00 1% ⅛W 50ppm M/F	HOLCO	H8C	—
R135		NOT USED			—
R136	000153	15k 5% ¼W CARBON	MULLARD	CR25	—

NOTES

SEE SHEET 2 FOR LATEST ISSUE

ISS													
E.C.O.													
DATE													
CHK'D													

DATE 17.8.79
DRAWN IL
CHECKED RLW
APPROVED
DATE

datron ELECTRONICS LTD

TITLE AC PCB ASSY

DRAWING NUMBER 400402

SHEET 7 OF 17

DESIGNATOR	DATRON PART No	DESCRIPTION	PRINCIPAL MANUFACTURER	MANUFACTURER'S PART No	No USED Per Assy
C1	120018	1μ5F 10% 63v POLYCARB	ASHCROFT	A2B1521B	1
C2	120030	820nF 10% 63v POLYCARB	ASHCROFT	SEE DRG.	1
C3	120021	470nF 10% 63v POLYCARB	ASHCROFT	A2B4711B	2
C4	120024	6μ8F 10% 63v POLYCARB	ASHCROFT	A2B6821B	1
C5	120020	220nF 10% 63v POLYCARB	ASHCROFT	A2B2211B	1
C6	150012	100nF 20% 35v DIP TANT	UNION CARBIDE	KR10E35	1
C7	120021	470nF 10% 63v POLYCARB	ASHCROFT	A2B4711B	–
C8	102680	68pF 5% 500v CER DISC	ITT	CD10	1
C9	102101	100pF 10% 500v CER DISC	ITT	CD10	2
C10	102471	470pF 10% 500v CER DISC	ITT	CD10	1
C11	150020	10μF 20% 25v DIP TANT	UNION CARBIDE	K10E25	8
C12	110013	100nF 20% 250v POLYESTER	MULLARD	C280AEP100k	5
C13	150020	10μF 20% 25v DIP TANT	UNION CARBIDE	K10E25	–
C14	150020	10μF 20% 25v DIP TANT	UNION CARBIDE	K10E25	–
C15	101103	10nF 25% 250v CER DISC	ITT	CD10	7
C16	150003	47μF 20% 6V3 DIP TANT	UNION CARBIDE	K47E6V3	1
C17	110013	100nF 20% 250v POLYESTER	MULLARD	C280AE P100k	–
C18	102108	1pF ±·5pF 500v CER DISC	ITT	CD06	1
C19	102470	47pF 5% 500v CER DISC	ITT	CD10	2
C20	150020	10μF 20% 25v DIP TANT	UNION CARBIDE	K10E25	–
C21	110013	100nF 20% 250v POLYESTER	MULLARD	C280AE P100k	–
C22	102100	10pF 5% 500v CER DISC	ITT	CD10	3
C23	102100	10pF 5% 500v CER DISC	ITT	CD10	–

NOTES.

SEE SHEET 2 FOR LATEST ISSUE

ISS																			
E.C.O.																			
DATE																			
CHKD																			

DATE 17.8.79
DRAWN IL
CHECKED RJW
APPROVED
DATE

datron ELECTRONICS LTD

TITLE AC PCB ASSY

DRAWING NUMBER 400402 SHEET 8 OF 17

DESIGNATOR	DATRON PART No	DESCRIPTION	PRINCIPAL MANUFACTURER	MANUFACTURER'S PART No	No USED Per Assy
C24	102478	4p7F ±·5pF 500v CER DISC	ITT	CD08	2
C25	102478	4p7F ±·5pF 500v CER DISC	ITT	CD08	–
C26	150020	10μF 20% 25v DIP TANT	UNION CARBIDE	K10E25	–
C27	150020	10μF 20% 25v DIP TANT	UNION CARBIDE	K10E25	–
C28	150016	1μF 20% 35v DIP TANT	UNION CARBIDE	K1R0E35	1
C29	130071	150pF 1% 160v POLYSTYRENE	SUFLEX	HSQ150/1 – 7/160	2
C30	130013	18pF ±1pF 160v POLYSTYRENE	SUFLEX	HS18/1 – 7/160	1
C31	110013	100nF 20% 250v POLYESTER	MULLARD	C280AE P100k	–
C32	110035	220nF 20% 63V POLYESTER	WIMA	MKS2 MIN	2
C33	110035	220nF 20% 63v POLYESTER	WIMA	MKS2 MIN	–
C34	102470	47pF 5% 500V CER DISC	ITT	CD10	–
C35	120022	1nSF 20% 100v POLYCARB	WIMA	FKC2 MIN	2
C36	120022	1nSF 20% 100v POLYCARB	WIMA	FKC2 MIN	–
C37	102101	100pF 10% 500v CER DISC	ITT	CD10	–
C38	102100	10pF 5% 500v CER DISC	ITT	CD10	–
C39	102331	330pF 10% 500v CER DISC	ITT	CD10	1
C40	150020	10μF 20% 25v DIP TANT	UNION CARBIDE	K10E25	–
C41	101103	10nF 25% 250v CER DISC	ITT	CD10	–
C42	130072	9p1F ±·5pF 160v POLYSTYRENE	SUFLEX	HS 9·1/·5 – 7/160	1
C43	130071	150pF 1% 160v POLYSTYRENE	SUFLEX	HSQ150/1 – 7/160	–
C44	150023	33μF 20% 25v DIP TANT	UNION CARBIDE	K33E25	1
C45	102150	15pF 5% 500v CER DISC	ITT	CD10	1
C46	102120	12pF 5% 500v CER DISC	ITT	CD10	1

NOTES.

SEE SHEET 2 FOR LATEST ISSUE

ISS																			
E.C.O.																			
DATE																			
CHKD																			

DATE 17.8.79
DRAWN IL
CHECKED RJW
APPROVED
DATE

datron ELECTRONICS LTD

TITLE AC PCB ASSY

DRAWING NUMBER 400402 SHEET 9 OF 17

DESIGNATOR	DATRON PART No	DESCRIPTION	PRINCIPAL MANUFACTURER	MANUFACTURER'S PART No.	No. USED Per Assy
C47	101103	10nF 25% 250v CER DISC	ITT	CD10	—
C48	140035	10nF 1% 125v SILV MICA	ITT	454/274	1
C49	140034	1nF 1% 300v GLASS	ELECTROSIL	CYFM15	1
C50	110013	100nF 20% 250v POLYESTER	MULLARD	C280AE P100k	—
C51	140033	91pF 1% 500v GLASS	ELECTROSIL	CYFM10	1
C52	110026	6n8F 20% 100v POLYESTER	WIMA	FKS2 MIN	1
C53	101103	10nF 25% 250v CER DISC	ITT	CD10	—
C54	101103	10nF 25% 250v CER DISC	ITT	CD10	—
C55	140039	15pF 5% 500v GLASS	ELECTROSIL	CYFM10	3
C56	150020	10μF 20% 25v DIP TANT	UNION CARBIDE	K10E25	—
C57	120001	220nF 10% 1kV POLYCARB	SUFLEX	SN1380	1
C58	140031	13pF 5% 500v GLASS	ELECTROSIL	CYFM10	1
C59	140039	15pF 5% 500v GLASS	ELECTROSIL	CYFM10	—
C60	140039	15pF 5% 500v GLASS	ELECTROSIL	CYFM10	—
C61	140008	10pF 1kV TRIMMER	JACKSON	TETFER VPC	1
C62	140036	25pF 1kV TRIMMER	JACKSON	TETFER VPC S646	2
C63	140036	25pF 1kV TRIMMER	JACKSON	TETFER VPC S646	—
C64	102228	2p2F ±·5pF 500v CER DISC	ITT	CD08	1
C65		NOT USED			—
C66	102220	22pF 5% 500V CER DISC	ITT	CD10	1
C67		NOT USED			—
C68	101103	10nF 25% 250V CER DISC	ITT	CD10	—
C69	101103	10nF 25% 250V CER DISC	ITT	CD10	—

NOTES

SEE SHEET 2 FOR LATEST ISSUE

ISS				DATE	17.8.79
				DRAWN	IL
DATE				CHECKED	R2W
DRAWN				APPROVED	
				DATE	

datron ELECTRONICS LTD

TITLE: AC PCB ASSY

DRAWING NUMBER: 400402 SHEET 10 OF 17

DESIGNATOR	DATRON PART No	DESCRIPTION	PRINCIPAL MANUFACTURER	MANUFACTURER'S PART No.	No. USED Per Assy
C70	102330	33pF 5% 500v CER DISC	ITT	CD10	1
C71		NOT USED			—
C72		NOT USED			—
C73		NOT USED			—
C74	102332	3n3F 20% 500V CER DISC	ITT	CD10	1
C75	102102	1nF 10% 500V CER DISC	ITT	CD10	2
C76	102102	1nF 10% 500V CER DISC	ITT	CD10	—
C77	100828	8p2F ±·25pF 100V CER DISC	MULLARD	2222 683	1

NOTES

SEE SHEET 2 FOR LATEST ISSUE

ISS				DATE	
				DRAWN	
DATE				CHECKED	
DRAWN				APPROVED	
				DATE	

datron ELECTRONICS LTD

TITLE: AC PCB. ASSY.

DRAWING NUMBER: 400402 SHEET 11 OF 17

DESIGNATOR	DATRON PART No.	DESCRIPTION	PRINCIPAL MANUFACTURER	MANUFACTURER'S PART No.	No. USED Per Assy.
D1	220010	Si HOT CARRIER DIODE	HP	HSCH1001/IN6263	4
D2	200008	200mA 125V LL Si DIODE	FAIRCHILD	IN458A	5
D3	200008	200mA 125V LL Si DIODE	FAIRCHILD	IN458A	–
D4	200008	200mA 125V LL Si DIODE	FAIRCHILD	IN458A	–
D5	210100	10V 400mW ZENER	MULLARD	BZY88C10	2
D6	200008	200mA 125V LL Si DIODE	FAIRCHILD	IN458A	–
D7	210100	10V 400mW ZENER	MULLARD	BZY88C10	–
D8	220010	Si HOT CARRIER DIODE	HP	HSCH1001/IN6263	–
D9	220010	Si HOT CARRIER DIODE	HP	HSCH1001/IN6263	–
D10		NOT USED			–
D11	220021	QUAD 29pF VARICAP DIODE	THOMPSON-CSF	BB109G4	SET OF 4
D12	200008	200mA 125V LL Si DIODE	FAIRCHILD	IN458A	–
D13	220010	Si HOT CARRIER DIODE	HP	HSCH1001/IN6263	–
D14	220020	FET DIODE 100pA IR	TELEDYNE	PAD100	3
D15	220020	FET DIODE 100pA IR	TELEDYNE	PAD100	–
D16	200001	75mA 75V GP Si DIODE	FAIRCHILD	IN4148	1
D17	220020	FET DIODE 100pA IR	TELEDYNE	PAD100	–

NOTES.

SEE SHEET 2 FOR LATEST ISSUE

ISS												
ECO												
DATE												
CHKD												

DATE 17.8.79
DRAWN IL
CHECKED RJW
APPROVED
DATE

datron ELECTRONICS LTD

TITLE AC PCB ASSY

DRAWING NUMBER 400402 SHEET 12 OF 17

DESIGNATOR	DATRON PART No.	DESCRIPTION	PRINCIPAL MANUFACTURER	MANUFACTURER'S PART No.	No. USED Per Assy.
Q1	230002	N-CHAN JFET	TELEDYNE	U1994JF	5
Q2	230002	N-CHAN JFET	TELEDYNE	U1994JF	–
Q3	230027	N-CHAN JFET	TELEDYNE	U3114JF	1
Q4	240013	Si NPN TRANSISTOR	NATIONAL	BC184C/TO18	4
Q5	240006	Si NPN TRANSISTOR	NATIONAL	2N3904/TO18	7
Q6	250004	Si PNP TRANSISTOR	NATIONAL	2N3906/TO18	7
Q7	240013	Si NPN TRANSISTOR	NATIONAL	BC184C/TO18	–
Q8	250008	Si PNP TRANSISTOR	NATIONAL	BC214C/TO18	6
Q9	230001	N-CHAN CURRENT LIM	SILICONIX	E506	1
Q10	250008	Si PNP TRANSISTOR	NATIONAL	BC214C/TO18	–
Q11	250004	Si PNP TRANSISTOR	NATIONAL	2N3906/TO18	–
Q12	240006	Si NPN TRANSISTOR	NATIONAL	2N3904/TO18	–
Q13	250008	Si PNP TRANSISTOR	NATIONAL	BC214C/TO18	–
Q14	240013	Si NPN TRANSISTOR	NATIONAL	BC184C/TO18	–
Q15	240006	Si NPN TRANSISTOR	NATIONAL	2N3904/TO18	–
Q16	250004	Si PNP TRANSISTOR	NATIONAL	2N3906/TO18	–
Q17	240006	Si NPN TRANSISTOR	NATIONAL	2N3904/TO18	–
Q18	250004	Si PNP TRANSISTOR	NATIONAL	2N3906/TO18	–
Q19	230035	N-CHAN JFET	TELEDYNE	U1897JF	1
Q20	250008	Si PNP TRANSISTOR	NATIONAL	BC214C/TO18	–
Q21	250008	Si PNP TRANSISTOR	NATIONAL	BC214C/TO18	–
Q22	250004	Si PNP TRANSISTOR	NATIONAL	2N3906/TO18	–
Q23	250004	Si PNP TRANSISTOR	NATIONAL	2N3906/TO18	–

NOTES.

SEE SHEET 2 FOR LATEST ISSUE

ISS												
ECO												
DATE												
CHKD												

DATE 17.8.79
DRAWN IL
CHECKED RJW
APPROVED
DATE

datron ELECTRONICS LTD

TITLE AC PCB ASSY

DRAWING NUMBER 400402 SHEET 13 OF 17

DESIGNATOR	DATRON PART No.	DESCRIPTION	PRINCIPAL MANUFACTURER	MANUFACTURER'S PART No.	No. USED Per Assy.
Q24	240006	Si NPN TRANSISTOR	NATIONAL	2N3904 / TO18	–
Q25	250004	Si PNP TRANSISTOR	NATIONAL	2N3906 / TO18	–
Q26	240006	Si NPN TRANSISTOR	NATIONAL	2N3904 / TO18	–
Q27	250008	Si PNP TRANSISTOR	NATIONAL	BC214C / TO18	–
Q28	240013	Si NPN TRANSISTOR	NATIONAL	BC184C / TO18	–
Q29	240006	Si NPN TRANSISTOR	NATIONAL	2N3904 / TO18	–
Q30	230003	N-CHAN JFET	TELEDYNE	U1899 JF	1
Q31	230002	N-CHAN JFET	TELEDYNE	U1994 JF	–
Q32	230031	N-CHAN DUAL JFET	TELEDYNE	SU2656M	2
Q33	240019	Si NPN DUAL TRANSISTOR	PMI	MAT01H	1
Q34	230031	N-CHAN DUAL JFET	TELEDYNE	SU2656M	–
Q35	230002	N-CHAN JFET	TELEDYNE	U1994 JF	–
Q36	230002	N-CHAN JFET	TELEDYNE	U1994 JF	–
Q37	230074	P-CHAN JFET	SILICONIX	J271	1

NOTES

SEE SHEET 2 FOR LATEST ISSUE

ISS													
DATE													
CHK													

DATE 17.8.79
DRAWN IL
CHECKED RZW.
APPROVED
DATE

datron ELECTRONICS LTD

TITLE: AC PCB ASSY

DRAWING NUMBER 400402 SHEET 14 OF 17

DESIGNATOR	DATRON PART No.	DESCRIPTION	PRINCIPAL MANUFACTURER	MANUFACTURER'S PART No.	No. USED Per Assy.
M1	260027	714 OP AMP	FAIRCHILD	μA714HC	5
M2	260027	714 OP AMP	FAIRCHILD	μA714 HC	–
M3	280015	QUAD D-TYPE LATCH	MOTOROLA	MC14076BCP	2
M4	280015	QUAD D-TYPE LATCH	MOTOROLA	MC14076BCP	–
M5	280011	DUAL D FLIP-FLOP	MOTOROLA	MC14013BCP	1
M6	290026	RMS KIT	DATRON	SEE DRG	–
M7	290077	7x DARLINGTON DRIVER	SPRAGUE / EXAR	ULN2004A / XR2204CP	1
M8	260027	714 OP AMP	FAIRCHILD	μA714 HC	–
M9	260027	714 OP AMP	FAIRCHILD	μA714 HC	–
M10	290066	FREQ SENSITIVE SWITCH	CONSUMER MICROCIRCUITS	FX301L	1
M11	260027	714 OP AMP	FAIRCHILD	μA714HC	–
RL1	330012-2	RELAY REED 1A GUARDED	HAMLIN	HE721A5134	4
RL2	330018	RELAY 2P2W 7v HOLD-IN	P & B	SEE DRAWING	2
RL3	330018	RELAY 2P2W 7v HOLD-IN	P & B	SEE DRAWING	–
RL4	330012-2	RELAY REED 1A GUARDED	HAMLIN	HE721A5134	–
RL5	330012-2	RELAY REED 1A GUARDED	HAMLIN	HE721A5134	–
RL6	330012-2	RELAY REED 1A GUARDED	HAMLIN	HE721A5134	–

NOTES

SEE SHEET 2 FOR LATEST ISSUE

ISS													
DATE													
CHK													

DATE 17.8.79
DRAWN IL
CHECKED RZW
APPROVED
DATE

datron ELECTRONICS LTD

TITLE: AC PCB ASSY

DRAWING NUMBER 400402 SHEET 15 OF 17

DESIGNATOR	DATRON PART No.	DESCRIPTION	PRINCIPAL MANUFACTURER	MANUFACTURER'S PART No.	No. USED Per Assy.
TP's, TL's.	540002	22 SWG TINNED COPPER WIRE			A/R
	590004	SLEEVE — PTFE	HELLERMANN ELECTRIC	FE10	A/R
J1	571095\C	16 WAY AP/3M RIBBON CABLE	DATRON		1
J2	605052	8 WAY POLARISED SOCKET	MOLEX	(22-01-2085) 6471-8-1	1
	590055	SLEEVE Ø1·0 SIL. RUBBER	HELLERMANN ELECTRIC	HIS CONT. BLACK	50mm
	400379/1	WIRE/TERMINAL ASSY.			1
	410136-4	PCB			1
	450249-2	GUARD SHIELD			1
	459112-2	RELAY BRACKET			2
	605056	CRIMP TERMINAL	MOLEX	4809-TL	1
	512999	7/0·2 PTFE INSULATED (WHITE) WIRE			A/R
	590001	SLEEVE MAX. CABLE Ø3·0	HELLERMAN ELECTRIC	HIS x 20mm BLACK HELSYN	7
	590002	SLEEVE MAX. CABLE Ø6·0	HELLERMAN ELECTRIC	H30 x 25mm BLACK HELSYN	1
	602001	FSV TERMINAL	MOLEX	02-04-1875	2
	602004	BREAKAWAY TERMINAL STRIP	MOLEX	05-30-0001	16
	605060	14 PIN DIL SOCKET	ASTRALUX	ICL 143-S3T	1
	605061	16 PIN DIL SOCKET	ASTRALUX	ICL 163-S6T	3
	605057	CRIMP TERMINAL	MOLEX	4809-GL	1
	611007	SCREW M3x6mm STEEL POZI-	CSK ZN/PLATED GKN		3
	611016	SCREW M3x8mm STEEL POZI-	PAN ZN/PLATED GKN		5

NOTES.

SEE SHEET 2 FOR LATEST ISSUE

ISS													
E.C.O.													
DATE													
CHKD													

DATE 17.8.79
DRAWN IL
CHECKED RJW
APPROVED
DATE

datron ELECTRONICS LTD

TITLE AC PCB ASSY.

DRAWING NUMBER 400402 SHEET 16 OF 17

DESIGNATOR	DATRON PART No.	DESCRIPTION	PRINCIPAL MANUFACTURER	MANUFACTURER'S PART No.	No. USED Per Assy.
	612021	STANDOFF M3x16 HEX STEEL	HARWIN	R6077-M3	3
	613005	WASHER M3 INT./SHAKEPROOF ST.	GKN DISTRIBUTORS	ZINC PLATED	5
	613014	WASHER M2·5 INT/SHAKEPROOF ST.	GKN DISTRIBUTORS	ZINC PLATED	2
	615002	NUT M3 FULL HEX STEEL		ZINC PLATED	2
	615005	NUT 3-48 UNC FULL HEX. ST.		ZINC PLATED	2.
	617010	NYLATCH PLUNGER HN3P	ORDER FROM C.J. FOX & SONS	HN3P-32-4-1	4.
	617011	NYLATCH GROMMET HN3G	ORDER FROM C.J. FOX & SONS.	HN3G-32-1	4
	620003	SOLDER PCB TERMINAL LUG	HARWIN	H2105A	2
	620005	CLOVERLEAF PTFE TERMINAL	SEALECTRO	FTE 15 P20	15
	630107	BRASS STRIP ·375mm THK x 15·5	RIGHTON	½ HARD	130mm
	620007	TEST POINT TERMINAL	MICROVAR	C30	6

NOTES.

SEE SHEET 2 FOR LATEST ISSUE

ISS													
E.C.O.													
DATE													
CHKD													

DATE 17.8.79
DRAWN IL
CHECKED RJW
APPROVED
DATE

datron ELECTRONICS LTD

TITLE AC PCB ASSY.

DRAWING NUMBER 400402 SHEET 17 OF 17

DESIGNATOR	DATRON PART No.	DESCRIPTION	MANUFACTURER	MANUFACTURER'S PART No.	QTY PER BOARD
R1	000104	100K 5% ¼W CARBON	MULLARD	CR25	3
R2	000103	10K 5% ¼W CARBON	MULLARD	CR25	1
R3	000104	100K 5% ¼W CARBON	MULLARD	CR25	
R4	000104	100K 5% ¼W CARBON	MULLARD	CR25	"
R5	000102	1K 5% ¼W CARBON	MULLARD	CR25	2
R6	000561	560R 5% ¼W CARBON	MULLARD	CR25	1
R7	000102	1k 5% ¼W CARBON	MULLARD	CR25	"
R8	000332	3K3 5% ¼W CARBON	MULLARD	CR25	1
AN1	090017	100k x 7 2% NETWORK	BECKMAN	764-1-R100A-B	1
C1	150015	10uF 20% 35V DIP TANT	UNION CARBIDE	KIDE35	3
C2	104025	100nF +80% -20% 50V CER DISC	SIEMENS	B37449	9
C3	150015	10uF 20% 35V DIP TANT	UNION CARBIDE	KIDE35	"
C4	150015	10uF 20% 35V DIP TANT	UNION CARBIDE	KIDE35	"
C5	150016	1uF 20% 35V DIP TANT	UNION CARBIDE	KIR035	"
C6	150012	100nF 20% 35V DIP TANT	UNION CARBIDE	KIR035	1
C7	104025	100nF +80% -20% 50V CER DISC	SIEMENS	B37449	"
C8	101103	10nF 25% 250V CER DISC	ITT	CD10	1
C9	102681	680pF 10% 500V CER DISC	ITT	CD10	1
C10	102101	100pF 10% 500V CER DISC	ITT	CD10	1
C11	104025	100nF +80% -20% 50V CER DISC	SIEMENS	B37449	"
C12	104025	100nF +80% -20% 50V CER DISC	SIEMENS	B37449	"
C13	104025	100nF +80% -20% 50V CER DISC	SIEMENS	B37449	"

NOTES

SEE SHEET 2 FOR LATEST ISSUE

ISS	
ECO	
DATE	
CHKD	

9 9 80

datron

1081/1065, 1071/1081
IEEE PCB ASSY

400427 A 5

DESIGNATOR	DATRON PART No.	DESCRIPTION	MANUFACTURER	MANUFACTURER'S PART No.	QTY PER BOARD
C14	104025	100nF +80% -20% 50V CER DISC	SIEMENS	B37449	"
C15	104025	100nF +80% -20% 50V CER DISC	SIEMENS	B37449	"
C16	104025	100nF +80% -20% 50V CER DISC	SIEMENS	B37449	"
C17	104025	100nF +80% -20% 50V CER DISC	SIEMENS	B37449	"
M1	280086	BI-DIRECTIONAL BUS TRANSCR	MOTOROLA	MC3447P	2
M2	280086	BI-DIRECTIONAL BUS TRANSCR	MOTOROLA	MC3447P	"

NOTES

SEE SHEET 2 FOR LATEST ISSUE

ISS	
ECO	
DATE	
CHKD	

28 2 84

datron

1081/1065/1071/1081
IEEE PCB ASSY

400427 B 5

DESIGNATOR	DATRON PART No	DESCRIPTION	PRINCIPAL MANUFACTURER	MANUFACTURER'S PART No	No. USED Per Assy.
M3		FITTED AT FINAL ASSY			—
M4		NOT USED			—
M5		NOT USED			—
M6	280024	TRI-STATE HEX BUFFER	MOTOROLA	MC14503BCP	1
M7		NOT USED			-
M8	270050	HEX INVERTER LS	NATIONAL	DM74LS04N	1
M9	280064	GPIA	MOTOROLA	MC68488P	1
M10	280068	DUAL PREC MSTABLE M'VIBR	MOTOROLA	MC14538BCP	1
M11	270055	DUAL 4 I/P NAND LS	NATIONAL	DM74LS20N	2
M12	270055	DUAL 4 I/P NAND LS	NATIONAL	DM74LS20N	—
M13	270051	DUAL 4 I/P AND LS	NATIONAL	DM74LS21N	1
J1	605102	24 WAY DIL SOCKET GOLD CA		CA-24S 105D	1
J2	605002	16WAY DIL LOW PROFILE SKT	JERMYN OR ANTIFERENCE	A23-2001/Y OR ICN-63-S3	1
J3	573120/C	24 WAY AP/3M CABLE ASSY	DATRON		1
J4	605051	4 WAY POLARISED SOCKET	MOLEX	(22-01-2045) 6471-4-1	1
	400379/1	WIRE/TERMINAL ASSY			2
	410165-4A	PCB			1
	540002	22 SWG BTC WIRE			A/R
	590004	SLEEVE - PTFE	HELLERMANN ELECTRIC	FE10	A/R
	605060	14 WAY DIL SOCKET	ASTRALUX OR JERMYN	ICL-143-S3T	4

NOTES

SEE SHEET 2 FOR LATEST ISSUE

DATE	datron ELECTRONICS LTD	
DRAWN	TITLE	1061/1065/1071/1081 IEEE PCB. ASSY.
CHECKED		
APPROVED	DRAWING NUMBER	400427
DATE	SHEET	4 OF 5

DESIGNATOR	DATRON PART No	DESCRIPTION	PRINCIPAL MANUFACTURER	MANUFACTURER'S PART No	No. USED Per Assy.
	605061	16WAY DIL SOCKET	ASTRALUX OR JERMYN	ICL-163-S6T	2
	605050	40 PIN DIL LOW PROF'SKT	AUGAT	340-AG39D	1
	605064	24 PIN DIL SOCKET	AUGAT	324-AG39D	3
	605056	CRIMP TERMINAL	MOLEX	4809-TL	2
	606005	CLIP FOR 605002	ANTIFERENCE	RC-74	1
	620007	TEST POINT TERMINAL	MICROVAR	C30	5
	900004	SILICONE RUBBER COMPOUND	RS	555-588	A/R

NOTES

SEE SHEET 2 FOR LATEST ISSUE

DATE	datron ELECTRONICS LTD	
DRAWN	TITLE	1061/1065/1071/1081 IEEE. PCB. ASSY.
CHECKED		
APPROVED	DRAWING NUMBER	400427
DATE	SHEET	5 OF 5

DESIGNATOR	DATRON PART No	DESCRIPTION	PRINCIPAL MANUFACTURER	MANUFACTURER'S PART No	No USED Per Assy
R1		NOT USED			–
R2		NOT USED			–
R3	000473	47k 5% 1/4W CARBON	MULLARD	CR25	4
R4	000223	22k 5% 1/4W CARBON	MULLARD	CR25	2
R5	080045-2	5k5 ·01% 3ppm M.FOIL	VISHAY	SEE DRG	4
R6	000152	1k5 5% 1/4W CARBON	MULLARD	CR25	1
R7	000473	47k 5% 1/4W CARBON	MULLARD	CR25	–
R8	000473	47k 5% 1/4W CARBON	MULLARD	CR25	–
R9	000103	10k 5% 1/4W CARBON	MULLARD	CR25	9
R10	000333	33k 5% 1/4W CARBON	MULLARD	CR25	2
R11	000105	1M 5% 1/4W CARBON	MULLARD	CR25	7
R12	000103	10k 5% 1/4W CARBON	MULLARD	CR25	–
R13	000155	1M5 5% 1/4W CARBON	MULLARD	CR25	1
R14	000105	1M 5% 1/4W CARBON	MULLARD	CR25	–
R15	000333	33k 5% 1/4W CARBON	MULLARD	CR25	–
R16		NOT USED			–
R17		NOT USED			–
R18		NOT USED			–
R19		NOT USED			–
R20	000223	22k 5% 1/4W CARBON	MULLARD	CR25	–
R21	000102	1k 5% 1/4W CARBON	MULLARD	CR25	3
R22	000473	47k 5% 1/4W CARBON	MULLARD	CR25	–
R23	000101	100R 5% 1/4W CARBON	MULLARD	CR25	6

NOTES CIRCUIT DIAGRAM = 430552
CHECK PROCEDURE = 460552
CHECK LIST = 470552
SEE SHEET 2 FOR LATEST ISSUE

ISS	1	2	3
	RELEASED 1700/1702	1801	1824
DATE	13.9.84	14.9.84	3.1.85	24.1.85

DATE 5.7.83
DRAWN IL
CHECKED LOG
APPROVED PAS 13.9.84

datron ELECTRONICS LTD
TITLE 1061A AC PCB ASSY 1062 OPTION 12
DRAWING NUMBER 400552
SHEET 2 OF 20

DESIGNATOR	DATRON PART No	DESCRIPTION	PRINCIPAL MANUFACTURER	MANUFACTURER'S PART No	No USED Per Assy
R24	000562	5k6 5% 1/4 W CARBON	MULLARD	CR25	3
R25	000122	1k2 5% 1/4W CARBON	MULLARD	CR25	1
R26	000102	1k 5% 1/4W CARBON	MULLARD	CR25	–
R27		FSV			1
R28	290026	RMS KIT	DATRON	SEE DRG	1 KIT
R29	000120	12R 5% 1/4W CARBON	MULLARD	CR25	1
R30	090111-1	100M 5% THICK FILM	HOLSWORTHY	SEE DRG	3
R31	000331	330R 5% 1/4W CARBON	MULLARD	CR25	3
R32	012743	274k 1% 1/8W 50ppm MF	HOLCO	H8C	1
R33	011003	100k 1% 1/8W 50ppm MF	HOLCO	H8C	1
R34	290026	RMS KIT	DATRON	SEE DRG	–
R35	000221	220R 5% 1/4W CARBON	MULLARD	CR25	5
R36	000680	68R 5% 1/4W CARBON	MULLARD	CR25	3
R37	000271	270R 5% 1/4W CARBON	MULLARD	CR25	2
R38	000271	270R 5% 1/4W CARBON	MULLARD	CR25	–
R39	000224	220k 5% 1/4W CARBON	MULLARD	CR25	1
R40	000104	100k 5% 1/4W CARBON	MULLARD	CR25	9
R41	000103	10k 5% 1/4W CARBON	MULLARD	CR25	–
R42	000104	100k 5% 1/4W CARBON	MULLARD	CR25	–
R43	000104	100k 5% 1/4W CARBON	MULLARD	CR25	–
R44		NOT USED			–
R45	016811	6k81 1/8W 50ppm MF	HOLCO	H8C	1
R46	012742	27k4 1% 1/8W 50ppm MF	HOLCO	H8C	1

NOTES

DATE 5.7.83
DRAWN IL
CHECKED LOG
APPROVED PAS 13.9.84

datron ELECTRONICS LTD
TITLE 1061A 1062 AC PCB ASSY
DRAWING NUMBER 400552
SHEET 3 OF 20

DESIGNATOR	DATRON PART No.	DESCRIPTION	PRINCIPAL MANUFACTURER	MANUFACTURER'S PART No.	No. USED Per Assy.
R47		NOT USED			—
R48		NOT USED			—
R49		NOT USED			—
R50		NOT USED			—
R51		NOT USED			—
R52	080064-8	28k0 ·1% 3ppm M.FOIL	VISHAY	SEE DRG	1
R53	080065	1k60 ·1% 10ppm M.FOIL	VISHAY	VSRC1	1
R54	018250	825R 1% 50ppm M.F	HOLCO	H8C	1
R55	013920	392R 1% 50ppm M.F	HOLCO	H8C	1
R56	012000	200R 1% 50ppm M.F	HOLCO	H8C	1
R57	000182	1k8 5% ¼W CARBON	MULLARD	CR25	4
R58	000151	150R 5% ¼W CARBON	MULLARD	CR25	1
R59	000752	7k5 5% ¼W CARBON	MULLARD	CR25	3
R60	000100	10R 5% ⅓W CARBON	MULLARD	CR25	4
R61	063100	10R POT ⅜ SQ. CERMET	BECKMAN	72P	2
R62	063100	10R POT ⅜ SQ. CERMET	BECKMAN	72P	—
R63	000100	10R 5% ¼W CARBON	MULLARD	CR25	—
R64	012003	200k 1% ⅛W 50ppm MF	HOLCO	H8C	1
R65	000124	120k 5% ¼W CARBON	MULLARD	CR25	1
R66		NOT USED			—
R67		NOT USED			—
R68		NOT USED			—
R69	000103	10k 5% ¼W CARBON	MULLARD	CR25	—

NOTES

SEE SHEET 2 FOR LATEST ISSUE

ISS													
E.C.O.													
DATE													
CHKD.													

DATE 5.7.83

DRAWN IL

CHECKED LOG

APPROVED

DATE

datron ELECTRONICS LTD

TITLE 1061A 1062 AC PCB ASSY

DRAWING NUMBER 400552

SHEET 4 OF 20

DESIGNATOR	DATRON PART No.	DESCRIPTION	PRINCIPAL MANUFACTURER	MANUFACTURER'S PART No.	No. USED Per Assy.
R70	080045-2	5k5 ·01% 3ppm M.FOIL	VISHAY	SEE DRG	—
R71	000331	330R 5% ¼W CARBON	MULLARD	CR25	—
R72	000680	68R 5% ¼W CARBON	MULLARD	CR25	—
R73	000562	5k6 5% ¼W CARBON	MULLARD	CR25	—
R74	080045-2	5k5 ·01% 3ppm M.FOIL	VISHAY	SEE DRG	—
R75	080044-2	4k9925 ·01% 3ppm M.FOIL	VISHAY	SEE DRG	1
R76	014991	4k99 1% ⅛W 50ppm MF	HOLCO	H8C	1
R77	090111-1	100M 5% THICK FILM	HOLSWORTHY	SEE DRG	—
R78	000182	1k8 5% ¼W CARBON	MULLARD	CR25	—
R79	000752	7k5 5% ¼W CARBON	MULLARD	CR25	—
R80	000471	470R 5% ¼W CARBON	MULLARD	CR25	1
R81	000105	1M 5% ¼W CARBON	MULLARD	CR25	—
R82	000475	4M7 5% ¼W CARBON	MULLARD	CR25	1
R83		NOT USED			—
R84	000103	10k 5% ¼W CARBON	MULLARD	CR25	—
R85	000105	1M 5% ¼W CARBON	MULLARD	CR25	—
R86	013323	332k 1% ⅛W 50ppm MF	HOLCO	H8C	1
R87	011503	150k 1% ⅛W 50ppm MF	HOLCO	H8C	1
R88	000105	1M 5% ¼W CARBON	MULLARD	CR25	—
R89	000104	100k 5% ¼W CARBON	MULLARD	CR25	—
R90	000182	1k8 5% ¼W CARBON	MULLARD	CR25	—
R91	000101	100R 5% ¼W CARBON	MULLARD	CR25	—
R92	000221	220R 5% ¼W CARBON	MULLARD	CR25	—

NOTES

SEE SHEET 2 FOR LATEST ISSUE

ISS													
E.C.O.													
DATE													
CHKD.													

DATE 5.7.83

DRAWN IL

CHECKED LOG

APPROVED

DATE

datron ELECTRONICS LTD

TITLE 1061A 1062 AC PCB ASSY

DRAWING NUMBER 400552

SHEET 5 OF 20

DESIGNATOR	DATRON PART No.	DESCRIPTION	PRINCIPAL MANUFACTURER	MANUFACTURER'S PART No.	No. USED Per Assy
R93	000221	220R 5% 1/4W CARBON	MULLARD	CR25	–
R94	011002	10kO 1% 1/8W 50ppm MF	HOLCO	H8C	1
R95	000272	2k7 5% 1/4W CARBON	MULLARD	CR25	2
R96	000272	2k7 5% 1/4W CARBON	MULLARD	CR25	–
R97	080047-2	10k ·01% 3ppm M. FOIL	VISHAY	SEE DRG	1
R98	080045-2	5k5 ·01% 3ppm M. FOIL	VISHAY	SEE DRG	–
R99	000101	100R 5% 1/4W CARBON	MULLARD	CR25	–
R100	000335	3M3 5% 1/4W CARBON	MULLARD	CR25	1
R101	063105	1M POT 3/8 SQ CERMET	BECKMAN	72P	1
R102	000225	2M2 5% 1/4W CARBON	MULLARD	CR25	1
R103	012001	2k00 1% 1/8W 50ppm MF	HOLCO	H8C	4
R104	012001	2k00 1% 1/8W 50ppm	HOLCO	H8C	–
R105	000221	220R 5% 1/4W CARBON	MULLARD	CR25	–
R106	000104	100k 5% 1/4W CARBON	MULLARD	CR25	–
R107		NOT USED			–
R108		NOT USED			–
R109		NOT USED			–
R110		NOT USED			–
R111		NOT USED			–
R112	013923	392k 1% 1/8W 50ppm MF	HOLCO	H8C	2
R113	013923	392k 1% 1/8W 50ppm MF	HOLCO	H8C	–
R114	000104	100k 5% 1/4W CARBON	MULLARD	CR25	–
R115	000222	2k2 5% 1/4W CARBON	MULLARD	CR25	3

NOTES

SEE SHEET 2 FOR LATEST ISSUE

DATE	5.7.83	datron ELECTRONICS LTD	
DRAWN	IL	TITLE	1061A 1062 AC PCB ASSY
CHECKED	LOG		
APPROVED		DRAWING NUMBER	400552
DATE		SHEET	6 OF 20

DESIGNATOR	DATRON PART No.	DESCRIPTION	PRINCIPAL MANUFACTURER	MANUFACTURER'S PART No.	No. USED Per Assy
R116	000752	7k5 5% 1/4W CARBON	MULLARD	CR25	–
R117	000680	68R 5% 1/4W CARBON	MULLARD	CR25	–
R118	000221	220R 5% 1/4W CARBON	MULLARD	CR25	–
R119	063204	200k POT 3/8 SQ. CERMET	BECKMAN	72P.	1
R120	000274	270k 5% 1/4W CARBON	MULLARD	CR25	1
R121	080043-2	1k ·1% 3ppm M. FOIL	VISHAY	SEE DRG	2
R122	080046-2	9k ·1% 3ppm M. FOIL	VISHAY	SEE DRG	1
R123	000103	10k 5% 1/4W CARBON	MULLARD	CR25	–
R124		NOT USED			–
R125	012001	2k00 1% 1/8W 50ppm MF	HOLCO	H8C	1
R126	000102	1k 5% 1/4W CARBON	MULLARD	CR25	–
R127	000682	6k8 5% 1/4W CARBON	MULLARD	CR25	2
R128	000101	100R 5% 1/4W CARBON	MULLARD	CR25	–
R129	000331	330R 5% 1/4W CARBON	MULLARD	CR25	–
R130	000182	1k8 5% 1/4W CARBON	MULLARD	CR25	–
R131	080050-2	62k6 ·1% 3ppm M. FOIL	VISHAY	SEE DRG	2
R132	080050-2	62k6 ·1% 3ppm M. FOIL	VISHAY	SEE DRG	–
R133	000330	33R 5% 1/4W CARBON	MULLARD	CR25	1
R134	000104	100k 5% 1/4W CARBON	MULLARD	CR25	–
R135	000103	10k 5% 1/4W CARBON	MULLARD	CR25	–
R136	018251	8k25 1% 1/8W 50ppm MF	HOLCO	H8C	1
R137		NOT USED			–
R138		NOT USED			–

NOTES

SEE SHEET 2 FOR LATEST ISSUE

DATE	5.7.83	datron ELECTRONICS LTD	
DRAWN	IL	TITLE	1061A 1062 AC PCB ASSY
CHECKED	LOG		
APPROVED		DRAWING NUMBER	400552
DATE		SHEET	7 OF 20

DESIGNATOR	DATRON PART No	DESCRIPTION	PRINCIPAL MANUFACTURER	MANUFACTURER'S PART No.	No. USED Per Assy.
R139	011822	18k2 1% 1/8W 50ppm MF	HOLCO	H8C	2
R140	014321	4k32 1% 1/8W 50ppm MF	HOLCO	H8C	1
R141		NOT USED			—
R142	080043-2	1k ·1% 3 ppm M.FOIL	VISHAY	SEE DRG	—
R143	080048-2	10k1 ·1% 3 ppm M.FOIL	VISHAY	SEE DRG	1
R144	080051-2	111k ·1% 3 ppm M.FOIL	VISHAY	SEE DRG	1
R145	000474	470K 5% 1/3W CARBON	MULLARD	CR25	1
R146	080062	1M ·1% 5 ppm M.FILM	VTM	MAR7-T16-1M-0·1%	1
R147	000101	100R 5% 1/4W CARBON	MULLARD	CR25	—
R148	063104	100k POT 3/8 SQ. CERMET	BECKMAN	72P	1
R149	011822	18k2 1% 1/8W 50ppm MF	HOLCO	H8C	—
R150	000100	10R 5% 1/4W CARBON	MULLARD	CR25	—
R151	000100	10R 5% 1/4W CARBON	MULLARD	CR25	—
R152		NOT USED			—
R153	000104	100k 5% 1/4W CARBON	MULLARD	CR25	—
R154	013320	332R 1% 1/8W 50ppm MF	HOLCO	H8C	1
R155	041004	1M 1% 1/2W 100ppm CF	ALLEN BRADLEY	CC	1
R156	011000	100R 1% 1/8W 50ppm MF	HOLCO	H8C	1
R157	000105	1M 5% 1/4W CARBON	MULLARD	CR25	—
R158	090111-1	100M 5% THICK FILM	HOLSWORTHY	SEE DRG	—
R159	000241	240R 5% 1/4W CARBON	MULLARD	CR25	1
R160	012001	2k00 1% 1/8W 50ppm MF	HOLCO	H8C	—
R161	000101	100R 5% 1/4W CARBON	MULLARD	CR25	—

NOTES

SEE SHEET 2 FOR LATEST ISSUE

ISS																			
E.C.O.																			
DATE																			
CHKD																			

DATE 5.7.83
DRAWN IL
CHECKED LOG
APPROVED
DATE

datron ELECTRONICS LTD

TITLE 1061A 1062 AC PCB ASSY

DRAWING NUMBER 400552 | SHEET 8 OF 20

DESIGNATOR	DATRON PART No	DESCRIPTION	PRINCIPAL MANUFACTURER	MANUFACTURER'S PART No.	No. USED Per Assy.
R162	012151	2k15 1% 1/8W 50ppm MF	HOLCO	H8C	1
R163	000912	9k1 5% 1/4W CARBON	MULLARD	CR25	1
R164	008047	470R 1% 1/2W MET-GLAZE	NEOHM	RGP0207	1
R165	008049	100k 1% 1/2W MET-GLAZE	NEOHM	RGP0207	1
R166	008048	560R 1% 1/2W MET-GLAZE	NEOHM	RGP0207	1
R167	080052-2	277k ·1% 3 ppm M.FOIL	VISHAY	SEE DRG	4
R168	080052-2	277k ·1% 3 ppm M.FOIL	VISHAY	SEE DRG	—
R169	080052-2	277k ·1% 3 ppm M.FOIL	VISHAY	SEE DRG	—
R170	080052-2	277k ·1% 3 ppm M.FOIL	VISHAY	SEE DRG	—
R171	000104	100k 5% 1/3W CARBON	MULLARD	CR25	—
R172	000562	5k6 5% 1/3W CARBON	MULLARD	CR25	—
R173	000822	8k2 5% 1/3W CARBON	MULLARD	CR25	1
R174	000105	1M 5% 1/3W CARBON	MULLARD	CR25	—
R175	000222	2k2 5% 1/3W CARBON	MULLARD	CR25	—
R176	000222	2k2 5% 1/3W CARBON	MULLARD	CR25	—
R177	000821	820R 5% 1/3W CARBON	MULLARD	CR25	2
R178	000821	820R 5% 1/3W CARBON	MULLARD	CR25	—
R179	000682	6k8 5% 1/3W CARBON	MULLARD	CR25	—
R180	000103	10k 5% 1/3W CARBON	MULLARD	CR25	—
R181	000103	10k 5% 1/3W CARBON	MULLARD	CR25	—
R182	000154	150k 5% 1/3W CARBON	MULLARD	CR25	1
AN1	090017	100k ×7 2% NETWORK	BECKMAN	L08-1-R100k	1

NOTES

SEE SHEET 2 FOR LATEST ISSUE

ISS																			
E.C.O.																			
DATE																			
CHKD																			

DATE 5.7.83
DRAWN IL
CHECKED LOG
APPROVED
DATE

datron ELECTRONICS LTD

TITLE 1061A 1062 AC PCB ASSY

DRAWING NUMBER 400552 | SHEET 9 OF 20

DESIGNATOR	DATRON PART No	DESCRIPTION	PRINCIPAL MANUFACTURER	MANUFACTURER'S PART No	No. USED Per Assy
C1	150020	10μF 20% 25V DIP TANT	UNION CARBIDE	K10E25	11
C2	150020	10μF 20% 25V DIP TANT	UNION CARBIDE	K10E25	—
C3		NOT USED			—
C4	110042	100nF 20% 63V POLYESTER	WIMA	MKS2	21
C5	120018	1μF 10% 63V POLYCARB	ASHCROFT	A2B1521B	1
C6	110015	15nF 20% 63V POLYESTER	WIMA	MKS2	1
C7	110042	100nF 20% 63V POLYESTER	WIMA	MKS2	—
C8	110042	100nF 20% 63V POLYESTER	WIMA	MKS2	—
C9	102101	100pF 10% 500V CER DISC	ITT	CD10	3
C10	150020	10μF 20% 25V DIP TANT	UNION CARBIDE	K10E25	—
C11	150020	10μF 20% 25V DIP TANT	UNION CARBIDE	K10E25	—
C12	150020	10μF 20% 25V DIP TANT	UNION CARBIDE	K10E25	—
C13	110042	100nF 20% 63V POLYESTER	WIMA	MKS2	—
C14		NOT USED			—
C15	110042	100nF 20% 63V POLYESTER	WIMA	MKS2	—
C16	110042	100nF 20% 63V POLYESTER	WIMA	MKS2	—
C17		NOT USED			—
C18	102121	120pF 10% 500V CER DISC	ITT	CD10	1
C19		NOT USED			—
C20	110042	100nF 20% 63V POLYESTER	WIMA	MKS2	—
C21	110042	100nF 20% 63V POLYESTER	WIMA	MKS2	—
C22	120012	1μF 10% 160V POLYCARB	ASHCROFT	A2B1025B	1
C23	102102	1nF 10% 500V CER DISC	ITT	CD10	2

NOTES.

SEE SHEET 2 FOR LATEST ISSUE

ISS													
E.C.O.													
DATE													
CHKD													

DATE 5.7.83 | datron ELECTRONICS LTD

DRAWN IL | CHECKED LOG | APPROVED | DATE

TITLE 1061A 1062 AC PCB ASSY

DRAWING NUMBER 400552 | SHEET 10 OF 20

DESIGNATOR	DATRON PART No	DESCRIPTION	PRINCIPAL MANUFACTURER	MANUFACTURER'S PART No	No. USED Per Assy
C24	110042	100nF 20% 63V POLYESTER	WIMA	MKS2	—
C25	101103	10nF 25% 250V CER DISC	ITT	CD10	8
C26	102101	100pF 10% 500V CER DISC	ITT	CD10	—
C27	102680	68pF 5% 500V CER DISC	ITT	CD10	1
C28	150004	100μF 20% 6V3 DIP TANT	UNION CARBIDE	K100E6V3	1
C29	110042	100nF 20% 63V POLYESTER	WIMA	MKS2	—
C30	110042	100nF 20% 63V POLYESTER	WIMA	MKS2	—
C31	102150	15pF 5% 500V CER DISC	ITT	CD10	2
C32	102150	15pF 5% 500V CER DISC	ITT	CD10	—
C33	102478	4p7F ±.5pF 500V CER DISC	ITT	CD08	2
C34	102478	4p7F ±.5pF 500V CER DISC	ITT	CD08	—
C35	102228	2p2F ±.5pF 500V CER DISC	ITT	CD08	1
C36	110042	100nF 20% 63V POLYESTER	WIMA	MKS2	—
C37	110042	100nF 20% 63V POLYESTER	WIMA	MKS2	—
C38	150023	33μF 20% 25V DIP TANT	UNION CARBIDE	K33E25	1
C39		NOT USED			—
C40		NOT USED			—
C41	130065	1n8F 1% 63V POLYSTYRENE	SUFLEX	HS1800/1-10/63	2
C42	102108	1pF ±.5pF 500V CER DISC	ITT	CD06	1
C43	130070	13pF ±.5pF 160V POLYSTYRENE	SUFLEX	HS13/1-7/160	2
C44	140058-1	150pF x2 MATCHED SET	DATRON	SEE DRG	1
C45	110042	100nF 20% 63V POLYESTER	WIMA	MKS2	—
C46	130070	13pF ± 1pF 160V POLYSTYRENE	SUFLEX	HS13/1-7/160	—

NOTES.

SEE SHEET 2 FOR LATEST ISSUE

ISS													
E.C.O.													
DATE													
CHKD													

DATE 5.7.83 | datron ELECTRONICS LTD

DRAWN IL | CHECKED LOG | APPROVED | DATE

TITLE 1061A 1062 AC PCB ASSY

DRAWING NUMBER 400552 | SHEET 11 OF 20

A4 11x8

DESIGNATOR	DATRON PART No	DESCRIPTION	PRINCIPAL MANUFACTURER	MANUFACTURER'S PART No	No. USED Per Assy
C47	102278	2p7F ± ·5pF 500V CER DISC	ITT	CD10	1
C48	110035	220nF 20% 63V POLYESTER	WIMA	MKS2	2
C49	110035	220nF 20% 63V POLYESTER	WIMA	MKS2	—
C50	102100	10pF 5% 500V CER DISC	ITT	CD10	1
C51	101103	10nF 25% 250V CER DISC	ITT	CD10	—
C52	110042	100nF 20% 63V POLYESTER	WIMA	MKS2	—
C53	110042	100nF 20% 63V POLYESTER	WIMA	MKS2	—
C54	110040	33nF 20% 63V POLYESTER	WIMA	MKS2	1
C55		NOT USED			—
C56	110042	100nF 20% 63V POLYESTER	WIMA	MKS2	—
C57	130065	1n8F 1% 63 V POLYSTYRENE	SUFLEX	HS1800/1-10/63	—
C58	110042	100nF 20% 63V POLYESTER	WIMA	MKS2	—
C59	102470	47pF 5% 500V CER DISC	ITT	CD10	2
C60	102102	1nF 10% 500V CER DISC	ITT	CD10	—
C61	110042	100nF 20% 63V POLYESTER	WIMA	MKS2	—
C62	140058-1	150pF x2 MATCHED SET	DATRON	SEE DRG	—
C63	101103	10nF 25% 250V CER DISC	ITT	CD10	—
C64	150020	10µF 20% 25V DIP TANT	UNION CARBIDE	K10E25	—
C65	140057-1	10nF ½% 125V SILV. MICA	DATRON	SEE DRG	1
C66	110042	100nF 20% 63V POLYESTER	WIMA	MKS2	—
C67	140056-1	1nF ½% 300V GLASS	DATRON	SEE DRG	1
C68	110026	6n8F 20% 100V POLYESTER	WIMA	FKS2	1
C69	140055-1	91pF ½% 500V GLASS	DATRON	SEE DRG	1

NOTES

SEE SHEET 2 FOR LATEST ISSUE

ISS													
E.C.O.													
DATE													
CHKD													

DATE 5.7.83
DRAWN IL
CHECKED LOG
APPROVED
DATE

datron ELECTRONICS LTD

TITLE 1061A AC PCB ASSY 1062

DRAWING NUMBER 400552 SHEET 12 OF 20

DESIGNATOR	DATRON PART No	DESCRIPTION	PRINCIPAL MANUFACTURER	MANUFACTURER'S PART No	No. USED Per Assy
C70	130025	22pF ± 1pF 160V POLYSTYRENE	SUFLEX	HS	1
C71	102330	33pF 5% 500V CER DISC	ITT	CD10	1
C72	110042	100nF 20% 63V POLYESTER	WIMA	MKS2	—
C73	150001	22µF 20% 16V DIP TANT	UNION CARBIDE	K22E16	1
C74	120010	1µ5F 10% 160V POLYCARB	ASHCROFT	A2B1525B	3
C75	120010	1µ5F 10% 160 V POLYCARB	ASHCROFT	A2B1525B	—
C76	120010	1µ5F 10% 160 V POLYCARB	ASHCROFT	A2B1525B	—
C77	120001	220nF 10% 1kV POLYCARB	SUFLEX	SN	1
C78	140031	13pF 5% 500V GLASS	ELECTROSIL	CYFM10	1
C79	140008	10pF 1kV TRIMMER	JACKSON	TETFER VPC	3
C80	102338	3p3F ± ·5pF 500V CER DISC	ITT	CD08	1
C81	140023	20pF 2% 500V GLASS	ELECTROSIL	CYFM10	2
C82	140008	10pF 1kV TRIMMER	JACKSON	TETFER VPC	—
C83	140039	15pF 5% 500V GLASS	ELECTROSIL	CYFM10	1
C84	140008	10pF 1kV TRIMMER	JACKSON	TETFER VPC	—
C85	140023	20pF 2% 500V GLASS	ELECTROSIL	CYFM10	—
C86	150020	10µF 20% 25V DIP TANT	UNION CARBIDE	K10E25	—
C87	150020	10µF 20% 25V DIP TANT	UNION CARBIDE	K10E25	—
C88	150002	10µF 20% 16V DIP TANT	UNION CARBIDE	K10E16	2
C89	150002	10µF 20% 16V DIP TANT	UNION CARBIDE	K10E16	—
C90	110027	3n3F 20% 100V POLYESTER	WIMA	FKS2	1
C91	150020	10µF 20% 25V DIP TANT	UNION CARBIDE	K10E25	—
C92	130074	6·8pF ± 1pF 16V POLYSTYRENE	SUFLEX	HS	1

NOTES.

SEE SHEET 2 FOR LATEST ISSUE

ISS													
E.C.O.													
DATE													
CHKD													

DATE 5.7.83
DRAWN IL
CHECKED LOG
APPROVED
DATE

datron ELECTRONICS LTD

TITLE 1061A AC PCB ASSY 1062

DRAWING NUMBER 400552 SHEET 13 OF 20

DESIGNATOR	DATRON PART No.	DESCRIPTION	PRINCIPAL MANUFACTURER	MANUFACTURER'S PART No.	No. USED Per Assy.
C93	150020	10µF 20% 25V DIP TANT	UNION CARBIDE	K10E25	—
C94	150020	10µF 20% 25V DIP TANT	UNION CARBIDE	K10E25	—
C95	150016	1µF 20% 35V DIP TANT	UNION CARBIDE	K1R0E35	1
C96	110009	1µF 20% 100V POLYESTER	WIMA	MKS	1
C97	101103	10nF 25% 250V CER DISC	ITT	CD10	—
C98	101103	10nF 25% 250V CER DISC	ITT	CD10	—
C99	101103	10nF 25% 250V CER DISC	ITT	CD10	—
C100	101103	10nF 25% 250V CER DISC	ITT	CD10	—
C101	101103	10nF 25% 250V CER DISC	ITT	CD10	—
C102	102101	100pF 10% 500V CER DISC	ITT	CD10	—
C103	102470	47pF 5% 500V CER DISC	ITT	CD10	—
C104	104017	0.5pF 0.1% 500V CER DISC	ITT	CD08	1

NOTES.

SEE SHEET 2 FOR LATEST ISSUE

ISS												
ECO												
DATE												
CHKD												

DATE 26.3.84
DRAWN
CHECKED
APPROVED
DATE

datron ELECTRONICS LTD

TITLE 1061A 1062 AC PCB ASSY

DRAWING NUMBER 400552 SHEET 14 OF 20

DESIGNATOR	DATRON PART No	DESCRIPTION	PRINCIPAL MANUFACTURER	MANUFACTURER'S PART No.	No. USED Per Assy.
D1		NOT USED			—
D2	210100	10V 400mW ZENER	MULLARD	BZY88C10	2
D3		NOT USED			—
D4	200008	200mA 125V LL Si DIODE	FAIRCHILD	IN458A	10
D5	200001	75mA 75V GP Si DIODE	FAIRCHILD	IN4148	3
D6	200008	200mA 125V LL Si DIODE	FAIRCHILD	IN458A	—
D7	200008	200mA 125V LL Si DIODE	FAIRCHILD	IN458A	—
D8	210120	12V 400mW ZENER	MULLARD	BZY88C12	3
D9	210120	12V 400mW ZENER	MULLARD	BZY88C12	—
D10		NOT USED			—
D11	210100	10V 400mW ZENER	MULLARD	BZY88C10	—
D12	220010	Si HOT CARRIER DIODE	HP	HSCH1001 / IN6263	2
D13	220010	Si HOT CARRIER DIODE	HP	HSCH1001 / IN6263	—
D14	220036	DUAL 500pF VARICAP DIODE	MULLARD	BB212	1
D15	200008	200mA 125V LL Si DIODE	FAIRCHILD	IN458A	—
D16	213011	1V5 250mW ZENER	MULLARD	BZV46-1V5	1
D17	200008	200mA 125V LL Si DIODE	FAIRCHILD	IN458A	—
D18	200008	200mA 125V LL Si DIODE	FAIRCHILD	IN458A	—
D19	210120	12V 400mW ZENER	MULLARD	BZY88C12	—
D20	210082	8V2 400mW ZENER	MULLARD	BZY88C8V2	1
D21		NOT USED			—
D22	200008	200mA 125V LL Si DIODE	FAIRCHILD	IN458A	—
D23	200008	200mA 125V LL Si DIODE	FAIRCHILD	IN458A	—

NOTES.

SEE SHEET 2 FOR LATEST ISSUE

ISS												
ECO												
DATE												
CHKD												

DATE 5.7.83
DRAWN
CHECKED LOG
APPROVED
DATE

datron ELECTRONICS LTD

TITLE 1061A 1062 AC PCB ASSY

DRAWING NUMBER 400552 SHEET 15 OF 20

F.W. 1164

DESIGNATOR	DATRON PART No	DESCRIPTION	PRINCIPAL MANUFACTURER	MANUFACTURER'S PART No	No. USED Per Assy.
D24	200008	200mA 125V LL Si. DIODE	FAIRCHILD	IN458A	—
D25	200008	200mA 125V LL Si. DIODE	FAIRCHILD	IN458A	—
D26	220020	FET DIODE 100pA I_R	TELEDYNE	PAD100/INSUL'D CASE	2
D27	200001	75mA 75V GP Si DIODE	FAIRCHILD	IN4148	—
D28	200001	75mA 75V GP Si DIODE	FAIRCHILD	IN4148	—
D29	213009	15V 5W ZENER	UNITRODE	TVS515	1
D30		NOT USED			—
D31	220020	FET DIODE 100pA I_R	TELEDYNE	PAD100/INSUL'D CASE	—
Q1		NOT USED			—
Q2		NOT USED			—
Q3	230027-1	N-CHAN JFET	TELEDYNE	U3114JF	2
Q4	240013	Si NPN TRANSISTOR	NATIONAL	BC184C/TO18	1
Q5	240006	Si NPN TRANSISTOR	NATIONAL	2N3904/TO18	3
Q6	250004	Si PNP TRANSISTOR	NATIONAL	2N3906/TO18	4
Q7	230042	N-CHAN I LIM 3.0mA	TELEDYNE	J509	3
Q8	230003	N-CHAN JFET	TELEDYNE	U1899JF	4
Q9	250011	Si PNP TRANSISTOR	NATIONAL	BC327/TO18	3
Q10		NOT USED			—
Q11	250008	Si PNP TRANSISTOR	NATIONAL	BC214C/TO18	1
Q12	250004	Si PNP TRANSISTOR	NATIONAL	2N3906/TO18	—
Q13	240006	Si NPN TRANSISTOR	NATIONAL	2N3904/TO18	—
Q14	230042	N-CHAN I LIM 3.0mA	TELEDYNE	J509	—

NOTES

SEE SHEET 2 FOR LATEST ISSUE

ISS													
E.C.O.													
DATE													
CHKD													

DATE 5.7.83
DRAWN IL
CHECKED LOG
APPROVED
DATE

datron ELECTRONICS LTD

TITLE 1061A 1062 AC PCB. ASSY

DRAWING NUMBER 400552 SHEET 16 OF 20

DESIGNATOR	DATRON PART No	DESCRIPTION	PRINCIPAL MANUFACTURER	MANUFACTURER'S PART No	No. USED Per Assy.
Q15	250011	Si PNP TRANSISTOR	NATIONAL	BC327/TO18	—
Q16	230003	N-CHAN JFET	TELEDYNE	U1899JF	—
Q17	250004	Si PNP TRANSISTOR	NATIONAL	2N3906/	—
Q18	230027-1	N CHAN JFET	TELEDYNE	U3114JF	—
Q19		NOT USED			—
Q20	230002	N-CHAN JFET	TELEDYNE	U1994JF	1
Q21	230056	N-CHAN JFET	SILICONIX	J212	1
Q22		NOT USED			—
Q23	230003	N-CHAN JFET	TELEDYNE	U1899JF	—
Q24		NOT USED			—
Q25	250004	Si PNP TRANSISTOR	NATIONAL	2N3906/TO18	—
Q26	240006	Si NPN TRANSISTOR	NATIONAL	2N3904/TO18	—
Q27	250011	Si PNP TRANSISTOR	NATIONAL	BC327/TO18	—
Q28	230042	N-CHAN I LIM 3.0mA	TELEDYNE	J509	—
Q29	230003	N-CHAN JFET	TELEDYNE	U1899JF	—
Q30		NOT USED			—
Q31	230035	N-CHAN JFET	TELEDYNE	U1897JF	4
Q32	230035	N-CHAN JFET	TELEDYNE	U1897JF	—
Q33	230035	N-CHAN JFET	TELEDYNE	U1897JF	—
Q34	230035	N-CHAN JFET	TELEDYNE	U1897JF	—
Q35	230058	N-CHAN I LIM 750μA	TELEDYNE	J504	1
Q36	230031	N-CHAN DUAL JFET	SILICONIX	U404	1

NOTES

SEE SHEET 2 FOR LATEST ISSUE

ISS													
E.C.O.													
DATE													
CHKD													

DATE 5.7.83
DRAWN IL
CHECKED LOG
APPROVED
DATE

datron ELECTRONICS LTD

TITLE 1061A 1062 AC PCB ASSY

DRAWING NUMBER 400552 SHEET 17 OF 20

DESIGNATOR	DATRON PART No.	DESCRIPTION	PRINCIPAL MANUFACTURER	MANUFACTURER'S PART No	No. USED Per Assy
M1		NOT USED			–
M2	260050	412 DUAL BIFET OP AMP	NATIONAL	LF 412 CN	2
M3	260028	1458 DUAL OP AMP	FAIRCHILD	µA1458 CTC	1
M4	260063	7650 OP AMP	INTERSIL	ICL7650 CTV	4
M5	280015	QUAD D-TYPE	MOTOROLA	MC14076 BCP	2
M6	280015	QUAD D-TYPE	MOTOROLA	MC14076 BCP	–
M7	280011	DUAL D FLIP FLOP	MOTOROLA	MC14013 BCP	1
M8		NOT USED			–
M9	260063	7650 OP AMP	INTERSIL	ICL 7650 CTV	–
M10	260063	7650 OP AMP	INTERSIL	ICL 7650 CTV	–
M11	290026	RMS KIT	DATRON	SEE DRG	1
M12	290077	7 x DARLINGTON DRIVER	SPRAGUE / EXAR	ULN2004 A / XR 2204CP	1
M13	260065	OP27 OP AMP	PMI	OP27 FZ	1
M14	260027	714 OP AMP	FAIRCHILD	µA 714 HC	2
M15	280116	DUAL 4 CHAN AN MUX	SILICONIX	DG 509 CJ	2
M16	260050	412 DUAL BIFET OP AMP	NATIONAL	LF 412 CN	–
M17	280116	DUAL 4 CHAN AN MUX	SILICONIX	DG 509 CJ	–
M18		NOT USED			–
M19	290066	FREQ. SENSITIVE SWITCH	CONSUMER MICROCIRCUITS	FX301L	1
M20	260027	714 OP AMP	FAIRCHILD	µA714 HC	–
M21	260063	7650 OP AMP	INTERSIL	ICL 7650 CTV	–
M22	260047	2625 OP AMP	HARRIS	HA32625-5	1

NOTES.

SEE SHEET 2 FOR LATEST ISSUE

ISS													
E.C.O.													
DATE													
CHKD													

DATE 5.7.83 | DRAWN IL | CHECKED LOG | APPROVED | DATE

datron ELECTRONICS LTD

TITLE 1061A 1062 AC PCB ASSY

DRAWING NUMBER 400552 | SHEET 18 OF 20

DESIGNATOR	DATRON PART No.	DESCRIPTION	PRINCIPAL MANUFACTURER	MANUFACTURER'S PART No	No. USED Per Assy
RL1	330012-2	REED RELAY 1A GUARDED	HAMLIN	HE721A5134	4
RL2	330018-1	RELAY 2P2W 7V HOLD-IN	AMF	SEE DRG	2
RL3	330018-1	RELAY 2P2W 7V HOLD-IN	AMF	SEE DRG	–
RL4	330012-2	REED RELAY 1A GUARDED	HAMLIN	HE721A5134	–
RL5	330012-2	REED RELAY 1A GUARDED	HAMLIN	HE721A5134	–
RL6	330012-2	REED RELAY 1A GUARDED	HAMLIN	HE721A5134	–
	450388-1	GUARD SHIELD			1
	400379/5	WIRE / TERMINAL ASSY			1
	410217-4	PCB			1
	459112-2	RELAY BRACKET			2
	540002	22SWG BTC WIRE			A/R
	512999	7/·2 PTFE INSUL. (WHITE) WIRE			490 mm
J1	571095/C	16 WAY AP/3M RIBBON CABLE			1
	590001	SLEEVE MAX CABLE Ø 3·0	HELLERMANN ELECTRIC	H15 x 20mm BLACK HELSYN	7
	590004	SLEEVE – PTFE	HELLERMANN ELECTRIC	FE10	A/R
	605059	8 WAY D.I.L. SOCKET			4
	602001	FSV TERMINAL	MOLEX	02-04-1875	2
	602004	BREAKAWAY TERM. STRIP	MOLEX	05-30-0001	16
J3	605052	8 WAY POLARISED SOCKET	MOLEX	(22-01-2085) 6471-8-1	1
	605060	14 PIN DIL SOCKET	ASTRALUX	ICL143-S3T	1
	605061	16 PIN DIL SOCKET	ASTRALUX	ICL 163-S6T	5
	605057	CRIMP TERMINAL	MOLEX	4809-GL	2

NOTES

SEE SHEET 2 FOR LATEST ISSUE

ISS													
E.C.O.													
DATE													
CHKD													

DATE 5.7.83 | DRAWN IL | CHECKED LOG | APPROVED | DATE

datron ELECTRONICS LTD

TITLE 1061A 1062 AC PCB ASSY

DRAWING NUMBER 400552 | SHEET 19 OF 20

DESIGNATOR	DATRON PART No	DESCRIPTION	PRINCIPAL MANUFACTURER	MANUFACTURER'S PART No	No USED Per Assy
	611007	M3 x 6mm POZI CSK STEEL	ZN. PL.		3
	611016	M3 x 8mm POZI PAN STEEL	ZN. PL.		5
	612021	M3 x 16mm SPACER	HARWIN	R6377-02	3
	613005	M3 INT. SHAKEPROOF			2
	613014	M2·5 INT. SHAKEPROOF			2
	615002	M3 FULL NUT STEEL ZN. PL.			2
	615005	3-48 UNC FULL NUT STEEL	ZN. PL.		2
	617010	NYLATCH PLUNGER 3/16"	HARTWELL CORP	HN3P-32-4-1	5
	617011	NYLATCH GROMMET 3/16"	HARTWELL CORP	HN3G-32-1	5
	620003	SOLDER PIN	HARWIN	H2105 A01	2
	620005	CLOVERLEAF PTFE INSUL.	SEALECTRO	FTE1SP59	9
	620007	TEST POINT TERMINAL	MICROVAR	TYPE C30	12
	630107	BRASS STRIP 15·5 x ·38mm	RIGHTON	CZ108 1/2H	220mm
	613029	M3 CRINKLE WASHER S.S			3
	620001	CLOVERLEAF. PTFE INSUL.	SEALECTRO	FTE 12 PS9	5
	620008	PTFE BUSH	SEALECTRO	119-0034	2
	630024	STEATITE BEAD 16 SWG	PARK ROYAL PORCELAIN	Nº 2	4

NOTES

SEE SHEET 2 FOR LATEST ISSUE

ISS													
E.C.O.													
DATE													
CHKD													

DATE 5.7.83

DRAWN

CHECKED LOG

APPROVED

DATE

datron ELECTRONICS LTD

TITLE 1061A 1062 AC PCB ASSY

DRAWING NUMBER 400552

SHEET 20 OF 20

440082/440083/440084

DESIGNATOR	DATRON PART No.	DESCRIPTION	PRINCIPAL MANUFACTURER	MANUFACTURER'S PART No.	No. USED Per Assy.
	400427	IEEE 488 OPTION P.C.B ASSY	DATRON		1
	400429	SOCKET/CABLE ASSY.	DATRON		1
	400346	ADDRESS SWITCH P.C.B ASSY	DATRON		1
	SEE TABLE	EXTERNAL TRIGGER ASSY	DATRON		1
	450169-3	STUD MOUNT STAND OFF			2
	450225-2	IEEE ADAPTOR PLATE			SEE TABLE
	G11016	SCREW M3 x 8 POSI PAN HD			2
	G13005	WASHER M3 INTERNAL SH'K PROOF			2
	G13020	WASHER M4 FLAT - STEEL			2
	G13021	WASHER M4 INTERNAL SH'K PROOF			2
	G15011	NUT M4 FULL HEX - STEEL			2
	G30042	ADHESIVE CABLE CLIP	2 CHCO	CFCC-8	2
M3	SEE TABLE	4K x 8 E PROM	DATRON		1

NOTES CIRCUIT REFER 430427

SEE SHEET 2 FOR LATEST ISSUE

TYPE	KIT	M3	450225 QTY.	EXT. TRIG. No.
1065	440082	290084-17E	0	400435
1061	440083	290070-17C	1	400400
1071	440084	290069-17C	1	400400

ISS	1	2	3	4	5	6	7	8	9
ECO	—	12.17	1313	1371	1368,1389	1410.1411	1451	1495	1519
DATE	6.1.81	19.8.81	13.7.82	24.8.82	9.9.82	24.11.82	31.3.83	2.6.83	18.8.83
INITIAL		DF	MD	MD	MD	MD	MD	MD	MD

DATE 6.1.81. datron ELECTRONICS LTD

DRAWN IL

CHECKED MD

APPROVED

DATE

TITLE IEEE 488 OPTION 1071/1061/1065

DRAWING NUMBER 440082 440083 440084

SHEET 1 OF 1

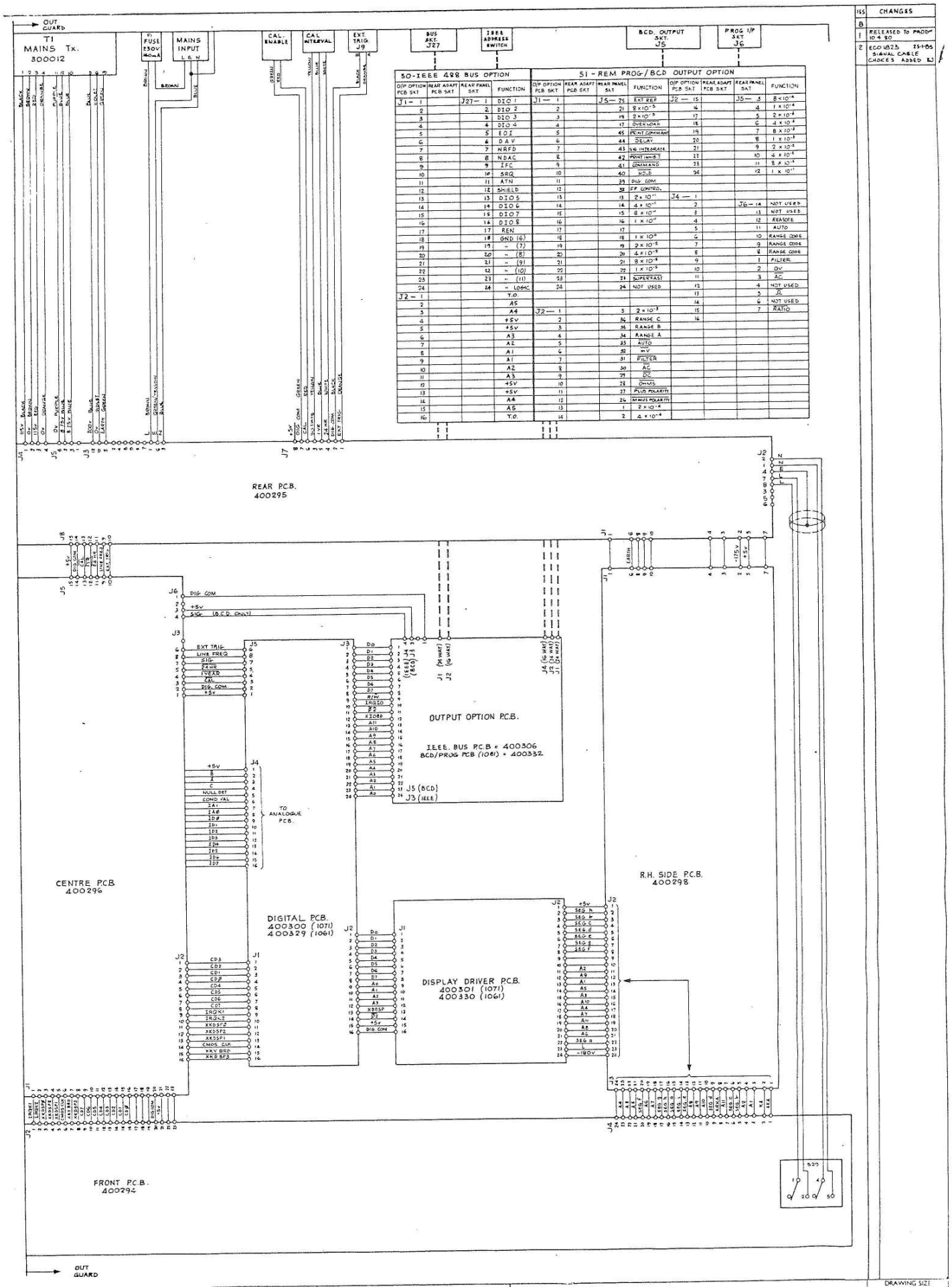

ISS	CHANGES
B	
1	RELEASED TO PRODN 10.4.80
2	ECO U823. 25-1-85 SIGNAL CABLE CHOICES ADDED EJ

DRAWN IL	CHECKED RA	DIMENSIONS IN MILLIMETRES	TOLERANCES: ANGULAR ± ° INCH DIMENSIONS DECIMAL TO 3 PLACES ± .005 DECIMAL TO 2 PLACES ± .010 FRACTIONAL ± 1/64 METRIC DIMENSIONS DECIMAL TO 2 PLACES ± 1mm DECIMAL TO 1 PLACE ± 2mm WHOLE DIMENSIONS ± 4mm UNLESS OTHERWISE STATED	MATERIAL	datron ELECTRONICS LTD. NORWICH.
TRACED	APPROVED	SCALE NOT TO BE SCALED		FINISH	TITLE 1061 / 1071 INTERCONNECTION DIAGRAM.
DATE 31.1.79	DATE				DRAWING SIZE A1
					DRAWING No. 430291 430326
					SHEET 1 OF 2

430291 /430326.

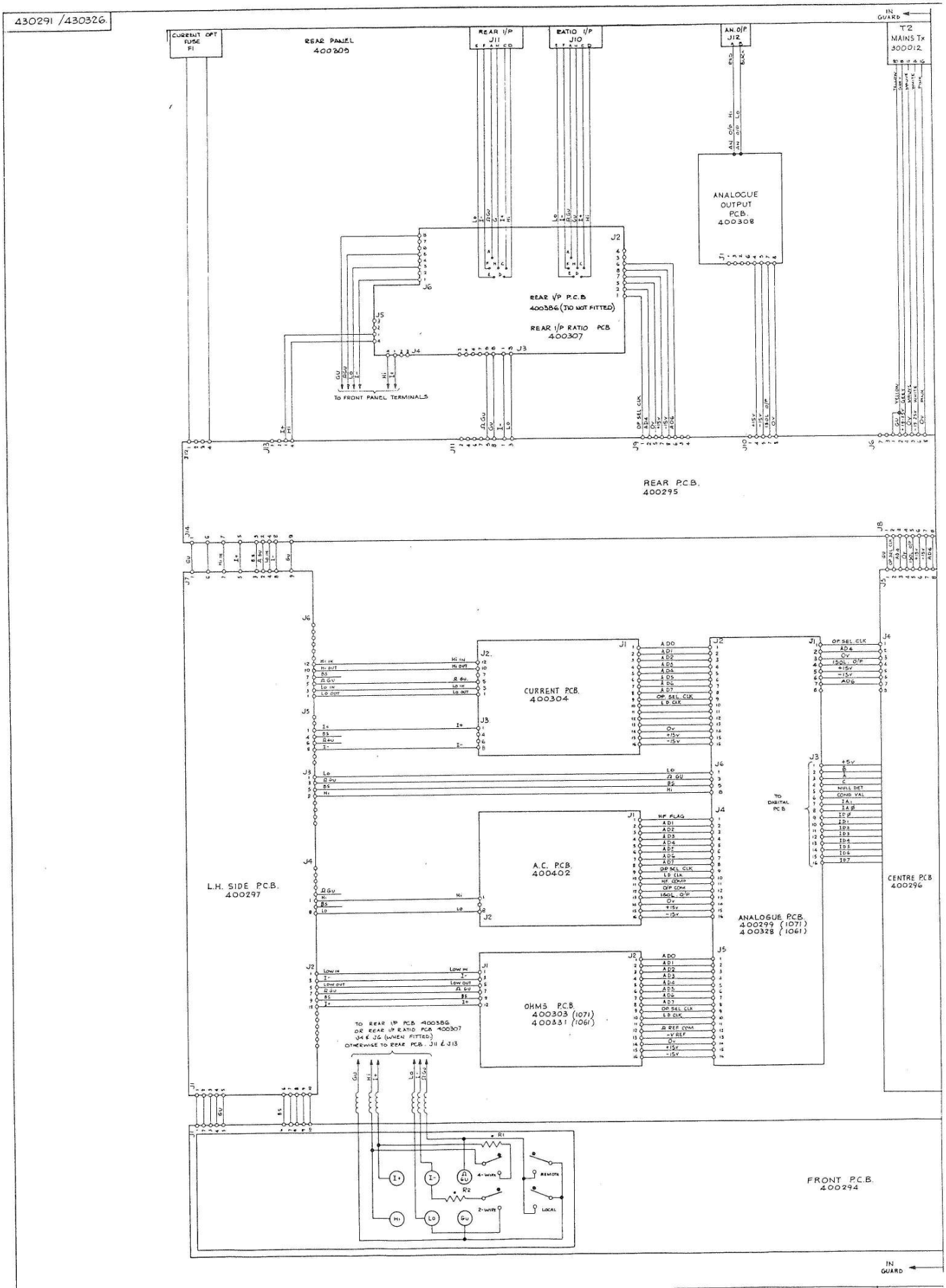

datron ELECTRONICS LTD. NORWICH.

DRAWING SIZE: A

TITLE: 1061/1071 INTERCONNECTION DIAGRAM

DRAWING No. 430291/430326

SHEET 2 OF 2

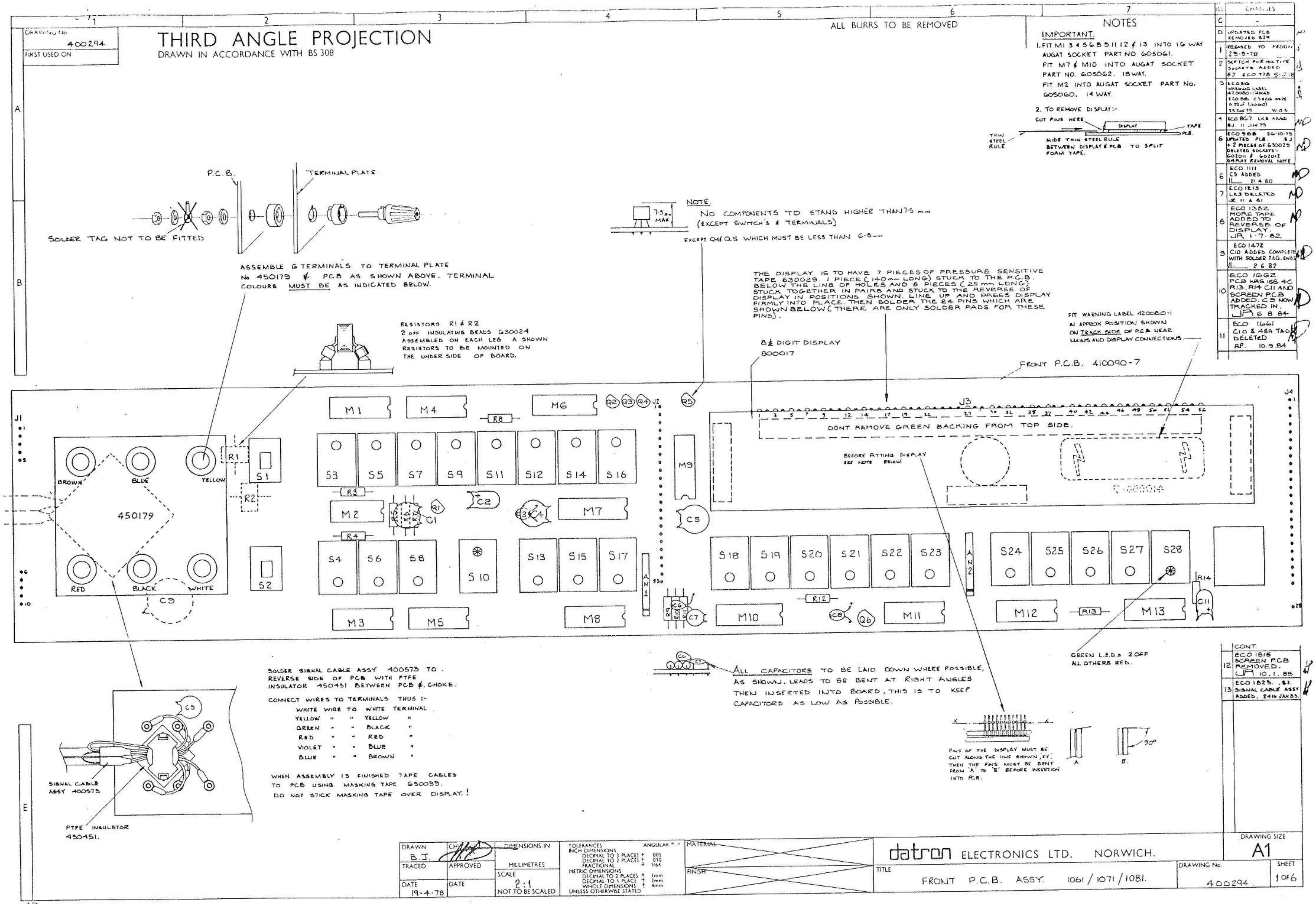
THIRD ANGLE PROJECTION
DRAWN IN ACCORDANCE WITH BS 308
DRAWING No 400294
FIRST USED ON
ALL BURRS TO BE REMOVED
NOTES
IMPORTANT.
1. FIT M1 3 4 5 6 8 9 11 12 & 13 INTO 16 WAY AUGAT SOCKET PART NO 605061.
FIT M7 & M10 INTO AUGAT SOCKET PART NO. 605062. 18 WAY.
FIT M2 INTO AUGAT SOCKET PART No. 605060. 14 WAY.
2. TO REMOVE DISPLAY:-
CUT PINS HERE
DISPLAY
TAPE
PCB.
THIN STEEL RULE
SLIDE THIN STEEL RULE BETWEEN DISPLAY & PCB TO SPLIT FOAM TAPE.
CHANGES
C -
D UPDATED PCB REMOVED 529
1 RELEASED TO PRODN 29-5-78
2 SKETCH FOR HOLTITE SOCKETS ADDED BJ ECO 778 5-7-78
3 ECO 816 WARNING LABEL 420080-1 ADDED ECO 868 C3 & C6 WERE 0.33uF (5000) 25 JAN 79 W.G.S
4 ECO 867. LK3 ADDED BJ. 11 JUN 79
5 ECO 988 26-10-79 UPDATED PCB. BJ + 2 PIECES OF 630029 DELETED SOCKETS:- 602011 & 602012 DISPLAY REMOVAL NOTE
6 ECO 1111 C9 ADDED IL 21 4 80
7 ECO 1213 LK3 DELETED JR 11 6 81
8 ECO 1352. MORE TAPE ADDED TO REVERSE OF DISPLAY. JR 1-7-82
9 ECO 1472 C10 ADDED COMPLETE WITH SOLDER TAG. END IL 2 6 82
10 ECO 1662 PCB WAS ISS. 4C R13, R14 C11 AND SCREEN P.C.B ADDED. C9 NOW TRACKED IN. JR 6 8 84
11 ECO 1661 C10 & 48A TAG DELETED AP. 10.9.84
CONT.
12 ECO 1815 SCREEN PCB REMOVED. JR 10.1.85
13 ECO 1825. .BJ. SIGNAL CABLE ASSY ADDED, 24th JAN 85.
P.C.B.
TERMINAL PLATE
SOLDER TAG NOT TO BE FITTED
ASSEMBLE 6 TERMINALS TO TERMINAL PLATE No 450179 & PCB AS SHOWN ABOVE. TERMINAL COLOURS MUST BE AS INDICATED BELOW.
NOTE
NO COMPONENTS TO STAND HIGHER THAN 7.5 mm (EXCEPT SWITCH'S & TERMINALS)
EXCEPT Q4/Q5 WHICH MUST BE LESS THAN 6.5 mm
7.5mm MAX
THE DISPLAY IS TO HAVE 7 PIECES OF PRESSURE SENSITIVE TAPE 630029. 1 PIECE (140mm LONG) STUCK TO THE P.C.B. BELOW THE LINE OF HOLES AND 6 PIECES (25mm LONG) STUCK TOGETHER IN PAIRS AND STUCK TO THE REVERSE OF DISPLAY IN POSITIONS SHOWN. LINE UP AND PRESS DISPLAY FIRMLY INTO PLACE. THEN SOLDER THE 24 PINS WHICH ARE SHOWN BELOW (THERE ARE ONLY SOLDER PADS FOR THESE PINS).
RESISTORS R1 & R2 2 OFF INSULATING BEADS 630024 ASSEMBLED ON EACH LEG AS SHOWN RESISTORS TO BE MOUNTED ON THE UNDER SIDE OF BOARD.
8½ DIGIT DISPLAY 800017
FIT WARNING LABEL 420080-1 IN APPROX POSITION SHOWN ON TRACK SIDE OF PCB NEAR MAINS AND DISPLAY CONNECTIONS
FRONT P.C.B. 410090-7
J1
J2
J3
J4
M1 M4 M6 R8 Q2 Q3 Q4 Q5
DONT REMOVE GREEN BACKING FROM TOP SIDE.
BROWN BLUE YELLOW
450179
RED BLACK WHITE
R1 S1 R2 S2
S3 S5 S7 S9 S11 S12 S14 S16
R3 M2 R5 C1 Q1 C2 C3 C4 M7 C5 M9
R4
S4 S6 S8 S10 S13 S15 S17
BEFORE FITTING DISPLAY SEE NOTE BELOW.
S18 S19 S20 S21 S22 S23 S24 S25 S26 S27 S28
R14 C11
C9
M3 M5 M8 M10 R12 C8 Q6 M11 M12 R13 M13 C7 C6
SOLDER SIGNAL CABLE ASSY 400573 TO REVERSE SIDE OF PCB WITH PTFE INSULATOR 450451 BETWEEN PCB & CHOKE.
CONNECT WIRES TO TERMINALS THUS :-
WHITE WIRE TO WHITE TERMINAL
YELLOW " " YELLOW "
GREEN " " BLACK "
RED " " RED "
VIOLET " " BLUE "
BLUE " " BROWN "
WHEN ASSEMBLY IS FINISHED TAPE CABLES TO PCB USING MASKING TAPE 630099.
DO NOT STICK MASKING TAPE OVER DISPLAY!
SIGNAL CABLE ASSY 400573
PTFE INSULATOR 450451.
ALL CAPACITORS TO BE LAID DOWN WHERE POSSIBLE, AS SHOWN. LEADS TO BE BENT AT RIGHT ANGLES THEN INSERTED INTO BOARD, THIS IS TO KEEP CAPACITORS AS LOW AS POSSIBLE.
GREEN L.E.D.s 2 OFF ALL OTHERS RED.
PINS OF THE DISPLAY MUST BE CUT ALONG THE LINE SHOWN, XX, THEN THE PINS MUST BE BENT FROM 'A' TO 'B' BEFORE INSERTION INTO PCB.
A B 90°
DRAWN B.J.
TRACED
APPROVED
DATE 19-4-78
DIMENSIONS IN MILLIMETRES
SCALE 2:1
NOT TO BE SCALED
TOLERANCES
MATERIAL
FINISH
datron ELECTRONICS LTD. NORWICH.
TITLE FRONT P.C.B. ASSY. 1061 / 1071 / 1081.
DRAWING SIZE A1
DRAWING No. 400294.
SHEET 1 of 6

DRAWING No 430294

FIRST USED ON 1081/71

THIRD ANGLE PROJECTION

DRAWN IN ACCORDANCE WITH BS 308

ALL BURRS TO BE REMOVED

NOTES

1. SIGNAL CDX ON J2-15, THERE IS A LINK 'LK2' IN THIS SIGNAL LINE.

ISS.	CHANGES
2	REDRAWN BJ 21-3-79
3	ECO 858 869 CHANGE ON SHT 2 BJ 11-6-79
4	ECO 1111 SEE SHEET 2 IL 21.4.80
5	ECO 1472 C10 ADDED (4n7F) IL 2.6.83
6	ECO 1662 R13 R14, C11 AND SCREEN PCB ADDED. ON M4, 5, 6, 8, 9, 11 AND M12 PIN 15 WENT TO ▽, AND PIN 16 WAS NC. M2 PIN 14 WAS NC. JP 7.8.84
7	ECO 1661 SEE SHT 2 MP 10.9.84
8	ECO 1823. SEE SHEET. 2. BJ. 24th JAN 85.

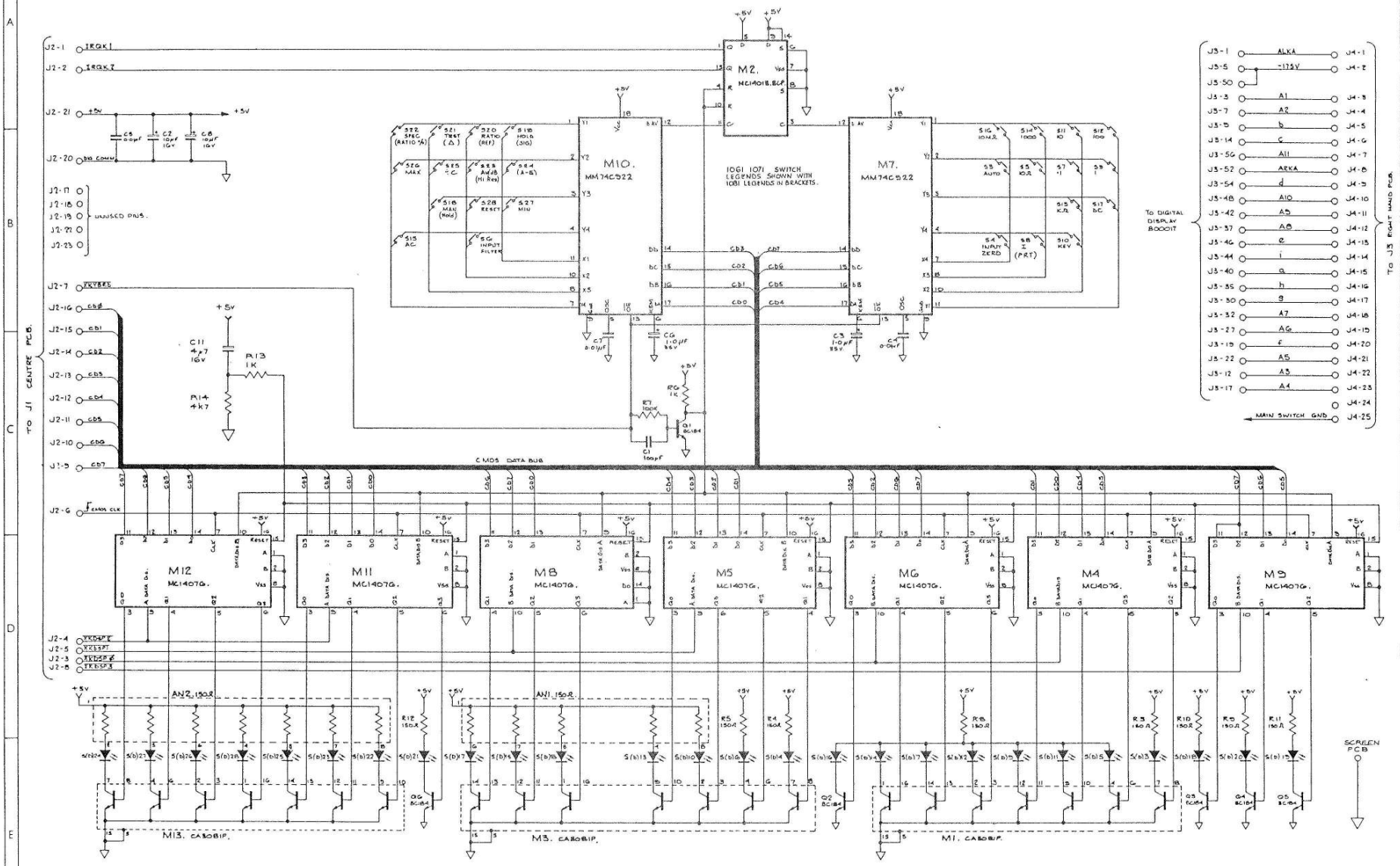

DRAWN	CHECKED	DIMENSIONS IN	TOLERANCES	MATERIAL	datron ELECTRONICS LTD. NORWICH.	DRAWING SIZE
BJ.	P.R.H.	MILLIMETRES	INCH DIMENSIONS DECIMAL TO 3 PLACES ± .005; DECIMAL TO 2 PLACES ± .010; FRACTIONAL ± 1/64			A1
TRACED	APPROVED	SCALE	METRIC DIMENSIONS DECIMAL TO 2 PLACES ± 1mm; DECIMAL TO 1 PLACE ± 2mm; WHOLE DIMENSIONS ± 4mm	FINISH	TITLE FRONT PCB CIRCUIT DIAGRAM 1061/1071/1081	DRAWING No 430294
DATE 21-3-79	DATE	NOT TO BE SCALED	UNLESS OTHERWISE STATED			SHEET 1 OF 2

DRAWING No. 430294

FRONT PCB 400294

SIGNAL CABLE ASSY 400573

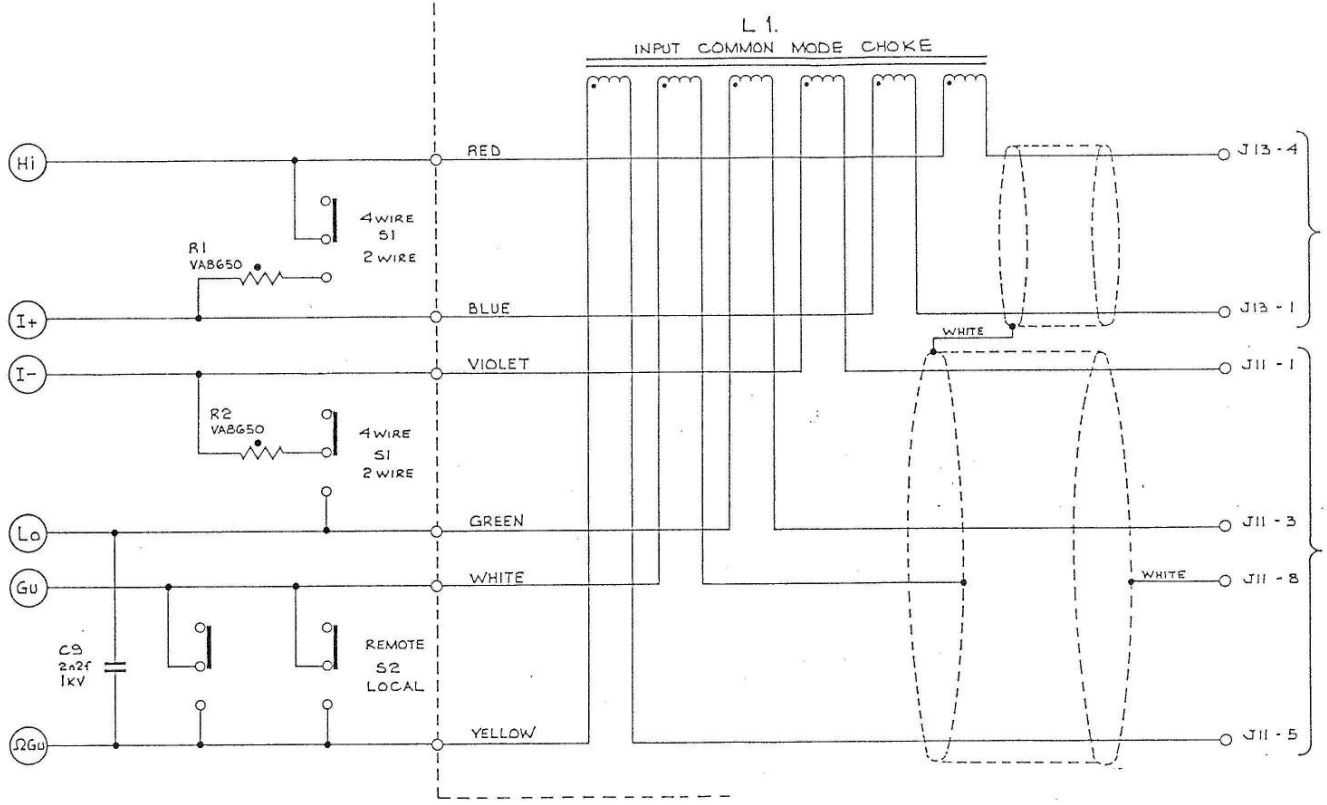

NOTES :-

1. Gu (J1-5) SCREENS ALL CIRCUITRY ON THIS SHEET.
2. B.S. SCREENS Hi & I+.
3. ΩG. SCREENS Lo & I-.

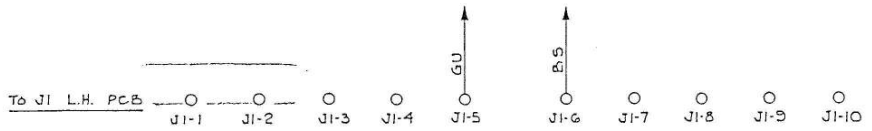

ISS	CHANGES
2	REDRAWN BJ 21.3.79.
3	ECO 899 SCREEN FOR Hi & I+ NOW CONNECTED TO Gu. VIA WHITE WIRE BJ 11-6-79
4	ECO 1111 C9 ADDED. IL 21.4.80
5	ECO 1472 C10 ADDED (4n7f) IL 2.6.83.
6	ECO 1662 SEE SHEET 1.
7	ECO 1661 C10 DELETED AP. 10.3.84.
8	ECO 1823 BJ. REDRAWN. 25-1-85 CABLE ASSY ADDED TO FRONT PCB ASSY. CHOKE ADDED TO SIGNAL CABLE.

datron INSTRUMENTS NORWICH ENGLAND

THIRD ANGLE PROJECTION	DRAWN B.S.JACKSON	DATE 24th JAN 85	DIMENSIONS IN MILLIMETRES	TOLERANCES DECIMAL TO 2 PLACES ±·1mm; DECIMAL TO 1 PLACE ±·2mm; WHOLE DIMENSIONS ±·4mm; ANGULAR ± ½° UNLESS OTHERWISE STATED	MATERIAL —	ASSY DRG & PARTS LIST 400294	TITLE FRONT PCB CIRCUIT DIAGRAM	DRAWING No. 430294.
	CHECKED MJD.	DATE 29.1.85	SCALE —		FINISH —	CIRCUIT DIAGRAM 430294		SHEET 2 OF 2
ALL BURRS TO BE REMOVED	APPR B Thomas	DATE 29.1.85	NOT TO BE SCALED			CHECK PROCEDURE 460294; CHECK LIST 470294		

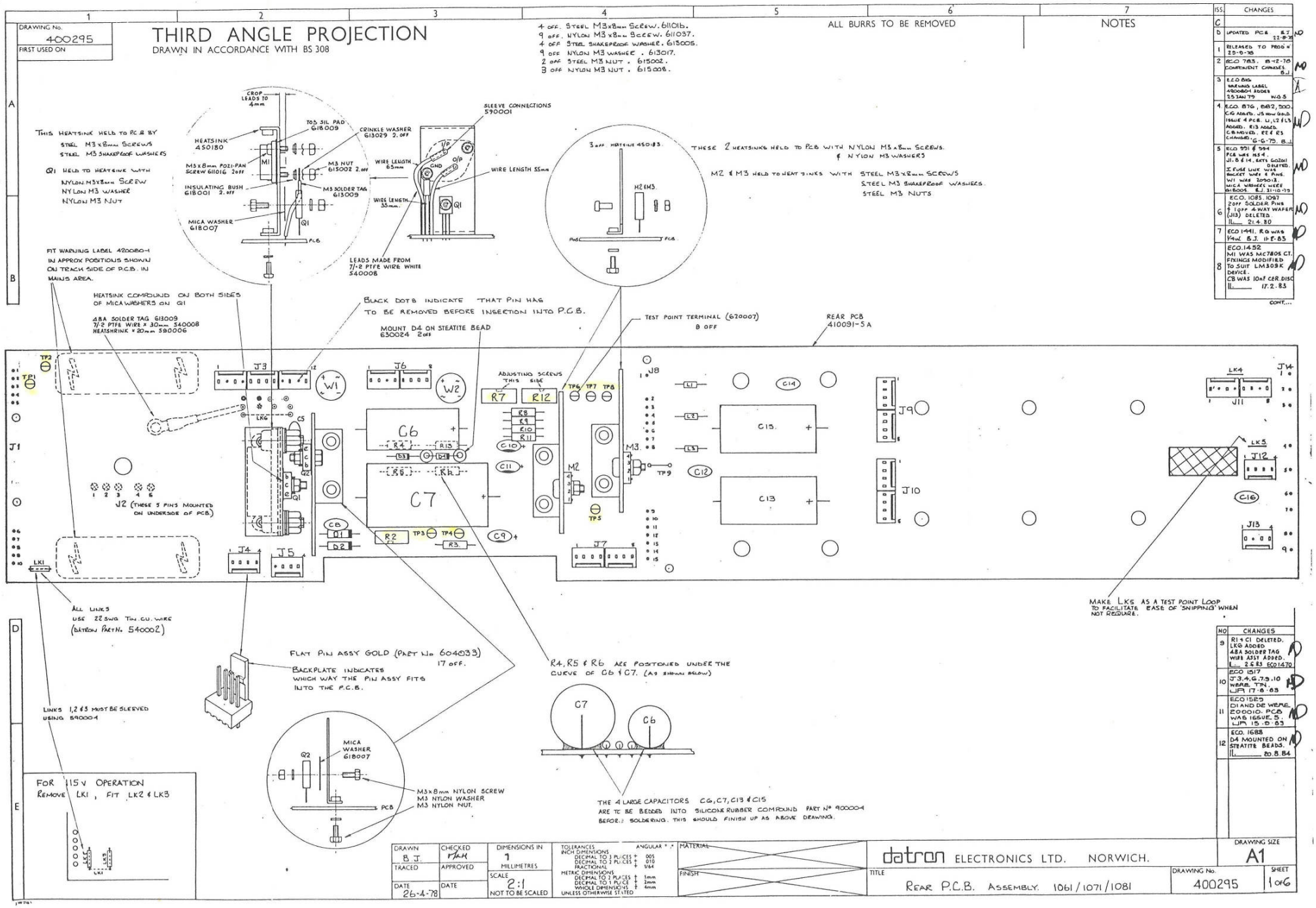

DRAWING No. 400295
FIRST USED ON
THIRD ANGLE PROJECTION
DRAWN IN ACCORDANCE WITH BS 308
4 OFF. STEEL M3x8mm SCREW. 611016.
9 OFF. NYLON M3x8mm SCREW. 611037.
4 OFF STEEL SHAKEPROOF WASHER. 613005.
9 OFF NYLON M3 WASHER. 613017.
2 OFF STEEL M3 NUT. 615002.
3 OFF NYLON M3 NUT. 615008.
ALL BURRS TO BE REMOVED
NOTES
THIS HEATSINK HELD TO PCB BY STEEL M3x8mm SCREWS STEEL M3 SHAKEPROOF WASHERS
Q1 HELD TO HEATSINK WITH NYLON M3x8mm SCREW NYLON M3 WASHER NYLON M3 NUT
CROP LEADS TO 4mm
HEATSINK 450180
TO3 SIL PAD 618009
CRINKLE WASHER 613029 2 OFF
M3x8mm POZI-PAN SCREW 611016 2OFF
M3 NUT 615002 2 OFF
INSULATING BUSH 618001 2 OFF
M3 SOLDER TAG 613009
MICA WASHER 618007
SLEEVE CONNECTIONS 590001
WIRE LENGTH 65mm
WIRE LENGTH 55mm
WIRE LENGTH 35mm
LEADS MADE FROM 7/-2 PTFE WIRE WHITE 540008
3 OFF HEATSINK 450183
THESE 2 HEATSINKS HELD TO PCB WITH NYLON M3x8mm SCREWS & NYLON M3 WASHERS
M2 & M3 HELD TO HEAT SINKS WITH STEEL M3x8mm SCREWS STEEL M3 SHAKEPROOF WASHERS STEEL M3 NUTS
FIT WARNING LABEL 420080-1 IN APPROX POSITIONS SHOWN ON TRACK SIDE OF P.C.B. IN MAINS AREA.
HEATSINK COMPOUND ON BOTH SIDES OF MICA WASHERS ON Q1
48A SOLDER TAG 613009
7/-2 PTFE WIRE x 30mm 540008
HEATSHRINK x 20mm 590006
BLACK DOTS INDICATE THAT PIN HAS TO BE REMOVED BEFORE INSERTION INTO P.C.B.
MOUNT D4 ON STEATITE BEAD 630024 2 OFF
TEST POINT TERMINAL (620007) 8 OFF
REAR PCB 410091-5A
ADJUSTING SCREWS THIS SIDE
J2 (THESE 5 PINS MOUNTED ON UNDERSIDE OF PCB)
ALL LINKS USE 22 SWG TIN CU. WIRE (DATRON PART No. 540002)
FLAT PIN ASSY GOLD (PART No 604033) 17 OFF.
BACKPLATE INDICATES WHICH WAY THE PIN ASSY FITS INTO THE P.C.B.
LINKS 1,2 & 3 MUST BE SLEEVED USING 590004
R4, R5 & R6 ARE POSITIONED UNDER THE CURVE OF C6 & C7. (AS SHOWN BELOW)
MICA WASHER 618007
M3x8mm NYLON SCREW
M3 NYLON WASHER
M3 NYLON NUT.
THE 4 LARGE CAPACITORS C6, C7, C13 & C15 ARE TO BE BEDDED INTO SILICONE RUBBER COMPOUND PART No 900004 BEFORE SOLDERING. THIS SHOULD FINISH UP AS ABOVE DRAWING.
MAKE LK5 AS A TEST POINT LOOP TO FACILITATE EASE OF 'SNIPPING' WHEN NOT REQUIRE.
FOR 115V OPERATION REMOVE LK1, FIT LK2 & LK3
ISS. CHANGES
D UPDATED PCB. B.J. 22-8-78
1 RELEASED TO PROD'N 25-8-78
2 ECO 783. 8-12-78 COMPONENT CHANGES. B.J.
3 ECO 816 WARNING LABEL 420080-1 ADDED 25 JAN 79 W.G.S.
4 ECO 876, 882, 900. C16 ADDED. J5 NOW GOLD. ISSUE 4 PCB. L1, L2 & L3 ADDED. R13 ADDED. C8 MOVED. R2 & R3 CHANGED. 6-6-79. B.J.
5 ECO 951 & 994 PCB WAS ISS 4. J1, 8 & 14. SETS 602011 DELETED. I FUSE LINK WAS SOCKET WIRE & PINS. W1 WAS 209013. MICA WASHERS WERE 618005. B.J. 31-10-79
6 ECO. 1085. 1097 2 OFF SOLDER PINS & 1 OFF 4 WAY WAFER (J13) DELETED. 21.4.80
7 ECO 1441. R6 WAS 1/4W. B.J. 11-8-83
8 ECO.1452 M1 WAS MC7805 CT. FIXINGS MODIFIED TO SUIT LM309K DEVICE. C8 WAS 10nF CER. DISC 17.2.83
CONT....
NO CHANGES
9 R1 & C1 DELETED. LK6 ADDED 48A SOLDER TAG WIRE ASSY ADDED. 2.6.83 ECO1470
10 ECO 1517 J3,4,6,7,9,10 WERE TIN. JR 17-8-83
11 ECO 1525 D1 AND D2 WERE 200010. PCB WAS ISSUE 5. JR 15-8-83
12 ECO. 1688 D4 MOUNTED ON STEATITE BEADS. 20.8.84
DRAWN B.J.
CHECKED
TRACED
APPROVED
DATE 26-4-78
DATE
DIMENSIONS IN 1 MILLIMETRES
SCALE 2:1 NOT TO BE SCALED
TOLERANCES ANGULAR ± 1°
INCH DIMENSIONS
DECIMAL TO 3 PLACES ± .005
DECIMAL TO 2 PLACES ± .010
FRACTIONAL ± 1/64
METRIC DIMENSIONS
DECIMAL TO 2 PLACES ± 1mm
DECIMAL TO 1 PLACE ± 2mm
WHOLE DIMENSIONS ± 4mm
UNLESS OTHERWISE STATED
MATERIAL
FINISH
datron ELECTRONICS LTD. NORWICH.
TITLE REAR P.C.B. ASSEMBLY. 1061/1071/1081
DRAWING SIZE A1
DRAWING No. 400295
SHEET 1 of 6

DRAWING No. 430295.

FIRST USED ON 1061/71.

THIRD ANGLE PROJECTION

DRAWN IN ACCORDANCE WITH BS 308

ALL BURRS TO BE REMOVED

NOTES

1. T1, T2, MAINS INPUT FILTER, F1, EXT TRIG. OPTION, ERROR SELECT & CAL ENABLE. ARE ALL FITTED ON THE REAR PANEL ASSY 400308, BUT INCLUDED ON THIS CIRCUIT DIAGRAM.

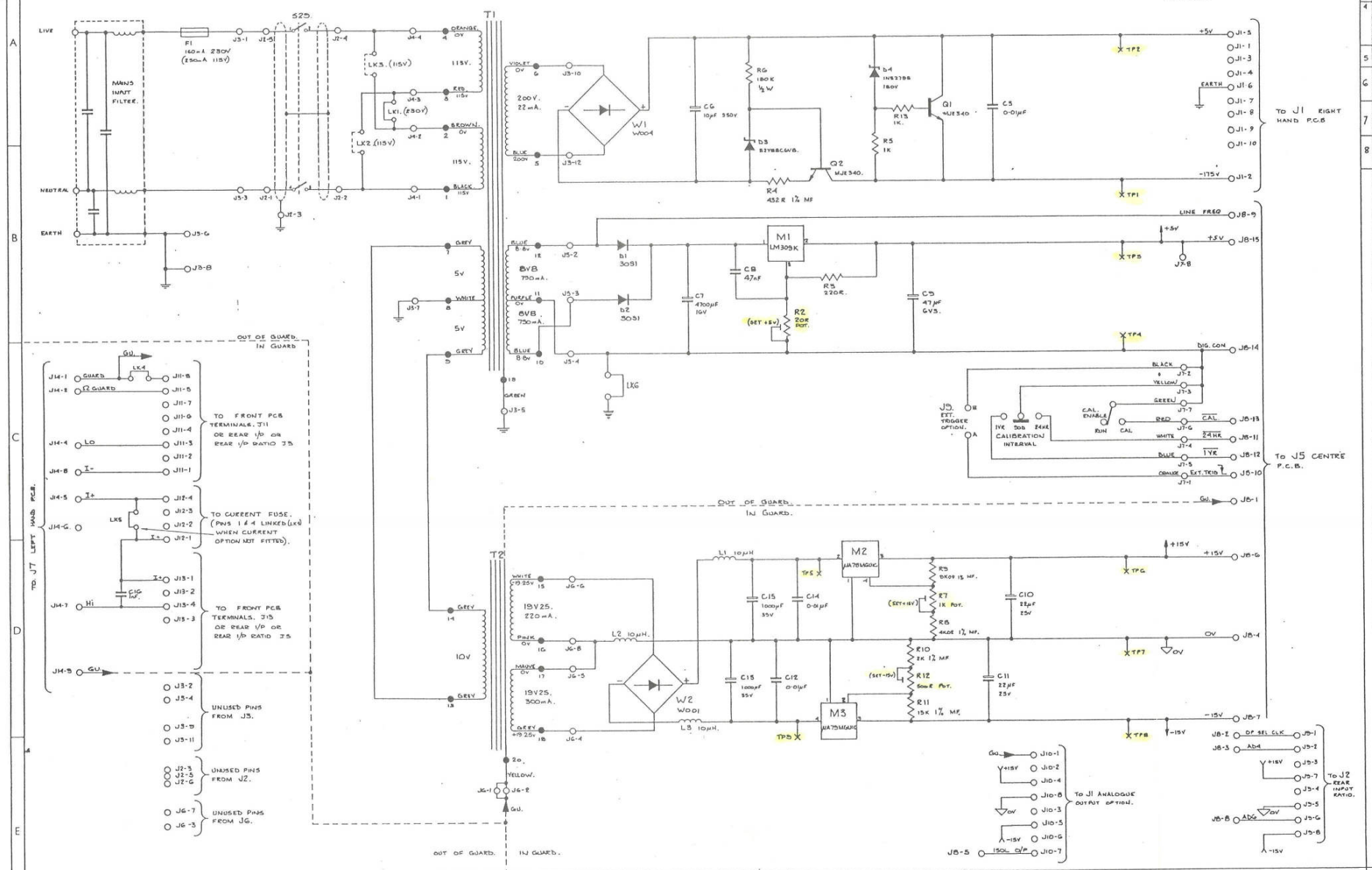

ISS.	CHANGES
2	RE-DRAWN 30-3-79 B.J.
3	ECO 882 & 900. ADDED C18, R13, L1, L2, L3 & LK4. R3 & R2 CHANGED 18-6-79. B.J.
4	ECO 991 & 994. W1 WAS W006 (230013) J8 PIN 4 CHANGED. J2 - - - LK5 ADDED. B.J. J8-8 ADDED. 31-10-79
5	ECO. 1085 J13 PINS 1 TO 4 DELETED 21.4.80
6	ECO. 1125 FUSE IN NEUTRAL LINE TO J3-3 DELETED. 22.5.80
7	ECO. 1452 M1 WAS MC7805CT C8 WAS 10nF 16.2.83
8	ECO. 1470 R1 (100k) & C1 (100nF) DELETED. LK6 ADDED 1.6.83

DRAWN	CHECKED	DIMENSIONS IN	TOLERANCES	MATERIAL
B.J.		MILLIMETRES	INCH DIMENSIONS: DECIMAL TO 3 PLACES ± .005; DECIMAL TO 2 PLACES ± .010; FRACTIONAL ± 1/64	
TRACED	APPROVED	SCALE	METRIC DIMENSIONS: DECIMAL TO 2 PLACES ± 1mm; DECIMAL TO 1 PLACE ± 2mm; WHOLE DIMENSIONS ± 4mm	FINISH
DATE 30-3-79.	DATE	NOT TO BE SCALED	UNLESS OTHERWISE STATED	

datron ELECTRONICS LTD. NORWICH.

TITLE: REAR PCB (INCLUDING REAR PANEL) CIRCUIT DIAGRAM 1061/1071/1081

DRAWING SIZE: A1

DRAWING No. 430295

SHEET 1 OF 1

DRAWING No. 400296
FIRST USED ON 1061 /1071

THIRD ANGLE PROJECTION

DRAWN IN ACCORDANCE WITH BS 308

ALL BURRS TO BE REMOVED

NOTES

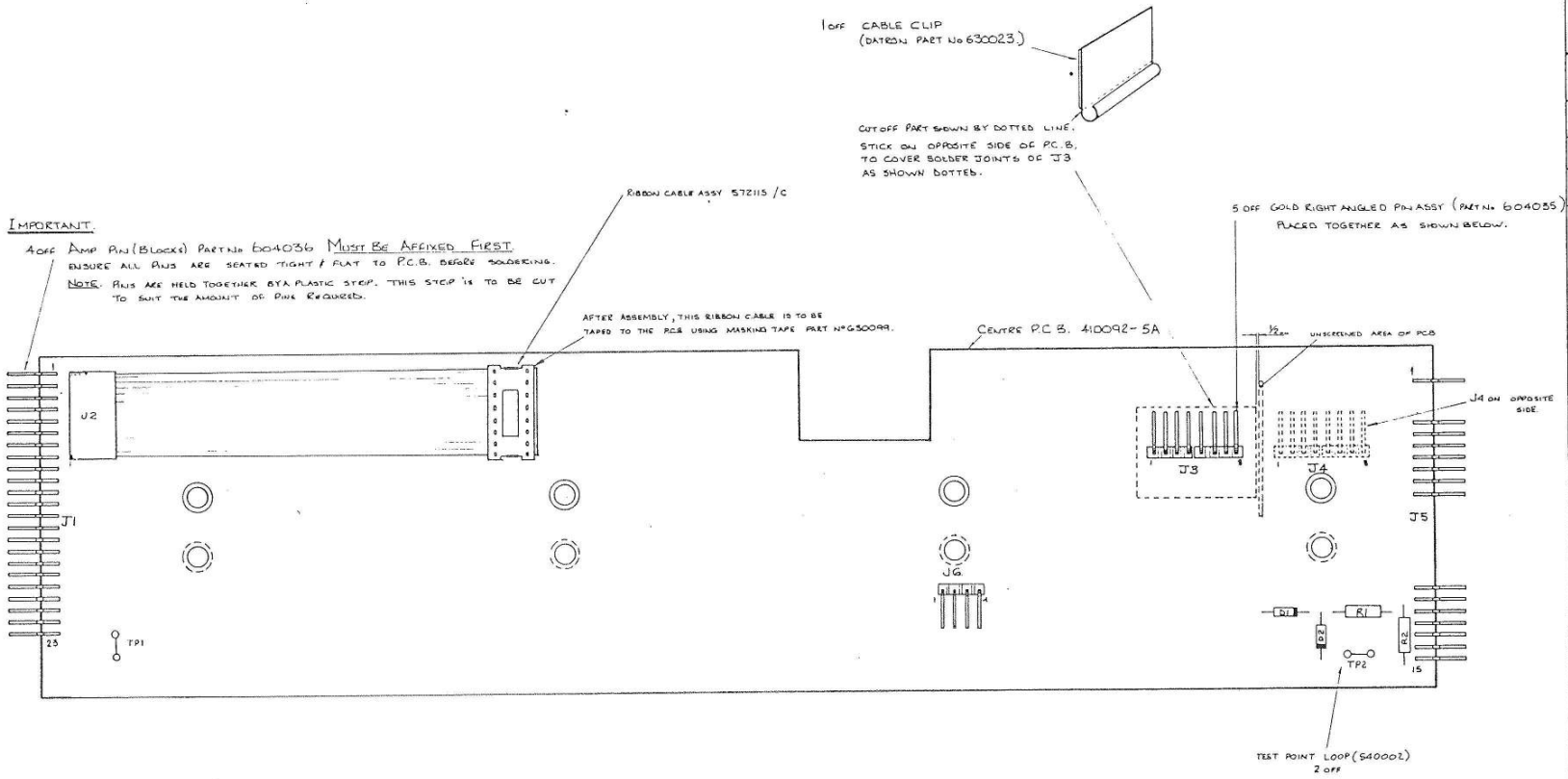

ISS.	CHANGES
C	
D	D1, D2, D3, R1 & R2 ADDED IN NEW ISS PCB B.J. 25-8-78
1	RELEASED TO PROD'N 25-5-78
2	ECO 784 RIBBON CABLE MODS. B.J. 6-12-78
3	ECO 849. PCB MODS B.J. 4-5-79
4	ECO 867. PCB UPDATE B.J. 11-6-79 & ECO 904 572130 CHANGE TO 572130/A 606006. CLIPS REMOVED & ECO 876 J3, 4 & 6 NEW GOLD NOT TIN
5	ECO 992 26-10-79. PCB WAS ISS 9A. B.J. PINS OF J5 ADDED. PCB CUT OUT INCREASED IN DEPTH.
6	ECO. 1000 RIBBON CABLE ASSY WAS 572100/A IL 18.1.80
7	ECO. 1102 PCB WAS ISSUE 5 IL 14.4.80
8	ECO 1217 RIBBON CABLE WAS 572130/B JR 16.6.81

DRAWN	CHECKED	DIMENSIONS IN MILLIMETRES	TOLERANCES INCH DIMENSIONS DECIMAL TO 3 PLACES ± .005 DECIMAL TO 2 PLACES ± .010 FRACTIONAL ± 1/64 METRIC DIMENSIONS DECIMAL TO 2 PLACES ± 1mm DECIMAL TO 1 PLACE ± 2mm WHOLE DIMENSIONS ± 4mm UNLESS OTHERWISE STATED	ANGULAR ° '	MATERIAL	datron ELECTRONICS LTD. NORWICH.	DRAWING SIZE A1
B.J.							
TRACED	APPROVED	SCALE 2:1 NOT TO BE SCALED			FINISH	TITLE CENTRE P.C.B ASSEMBLY. 1061/1071/1081	DRAWING No. 400296
DATE 25-4-78	DATE						SHEET 1 OF 2

DRAWING No.	FIRST USED ON
430296	1061 / 1071

THIRD ANGLE PROJECTION

DRAWN IN ACCORDANCE WITH BS 308

ALL BURRS TO BE REMOVED

NOTES

1. "IN GUARD" TRACKS TO BE ON CCT. SIDE (SHT. 2) & "OUT OF GUARD" TRACKS TO BE ON THE COMP. SIDE (SHT. 3) OF P.C.B. WHERE POSSIBLE.

ISS.	CHANGES
D	
1	RELEASED TO PRODN 29-5-78.
2	ECO 848. J6-4 SIG JOINED TO J3-7. B.J. 4-5-79
3	ECO 852. B.J. J5-8 ADDED & J5-1 GND. DELETED 29-10-79

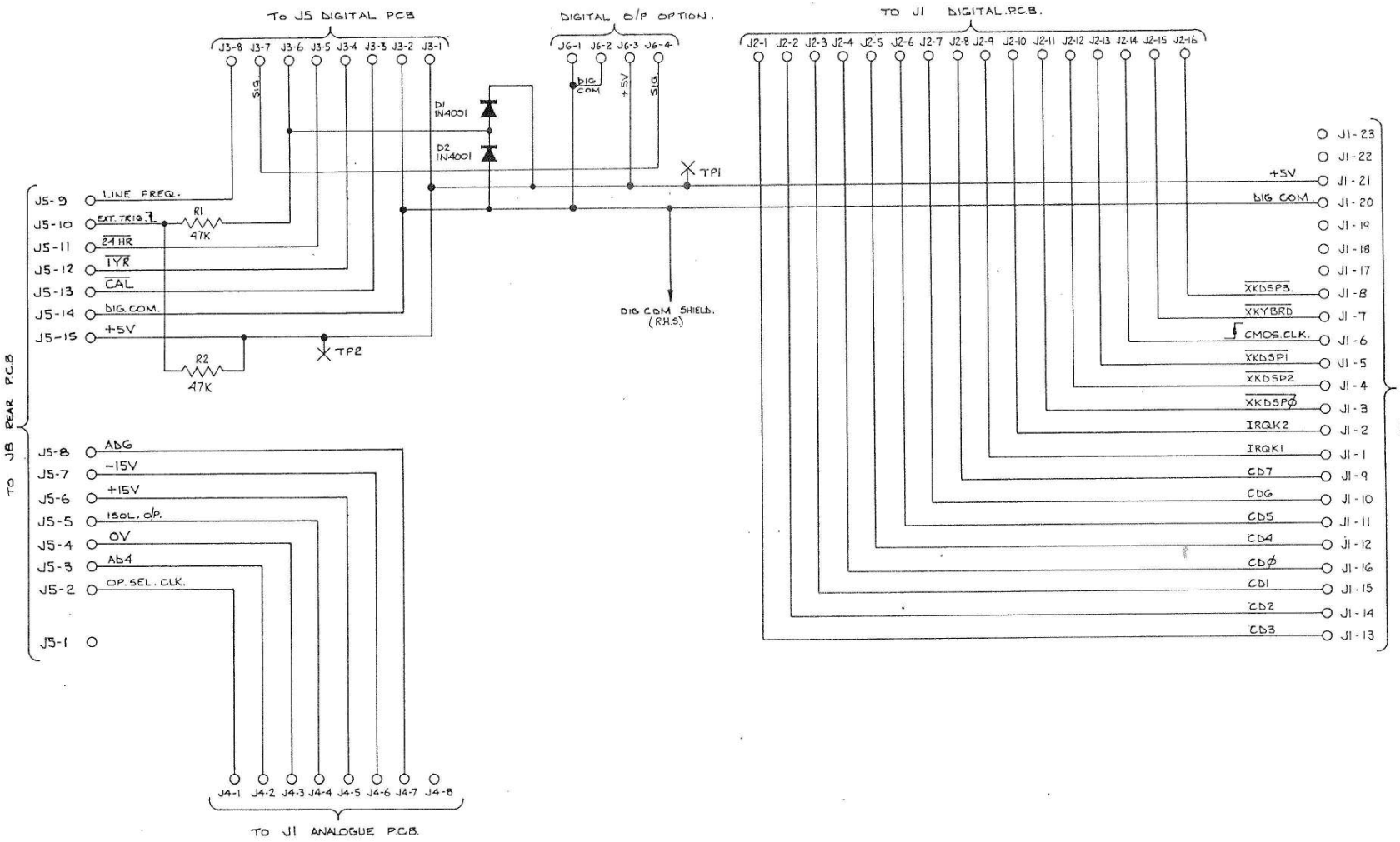

DRAWN	CHECKED	DIMENSIONS IN	TOLERANCES ANGULAR ± 1°	MATERIAL	datron ELECTRONICS LTD. NORWICH.	DRAWING SIZE
B.J.	D.C.	MILLIMETRES	INCH DIMENSIONS DECIMAL TO 3 PLACES ± .005; DECIMAL TO 2 PLACES ± .010; FRACTIONAL ± 1/64			A2
TRACED	APPROVED	SCALE	METRIC DIMENSIONS DECIMAL TO 2 PLACES ± 1mm; DECIMAL TO 1 PLACE ± 2mm; WHOLE DIMENSIONS ± 4mm	FINISH	TITLE CENTRE PCB SCHEMATIC 1061 / 1071 / 1081	DRAWING No. 430296
DATE 30-5-78	DATE	NOT TO BE SCALED	UNLESS OTHERWISE STATED			SHEET 1 OF 1

DRAWING No 400297
FIRST USED ON 1061/71

THIRD ANGLE PROJECTION

DRAWN IN ACCORDANCE WITH BS 308

ALL BURRS TO BE REMOVED

NOTES

ISS.	CHANGES
G	—
H	NEW MARK PCB #7 14-8-78 MD
I	RELEASED TO PRODN 20-9-78
J	ECO 867 PCB UPDATE BJ 11-6-79 MD

USE THE GOLD 4 EIGHT ANGLED PIN ASSY (PART NO 604035). 12 OFF.
PLACED TOGETHER TO MAKE UP THE REQUIRED AMOUNT OF CONTACTS (SHOWN BELOW).
REMOVE PINS IN PLACES SHOWN BY BLACK DOTS.

IMPORTANT

2 OFF. AMP PINS (PART No 604036) MUST BE AFFIXED FIRST.
ENSURE ALL PINS ARE SEATED TIGHT & FLAT TO P.C.B. BEFORE SOLDERING.

NOTE. PINS ARE HELD TOGETHER BY A PLASTIC STRIP. THIS STRIP IS TO BE CUT TO SUIT THE AMOUNT OF PINS REQUIRED.

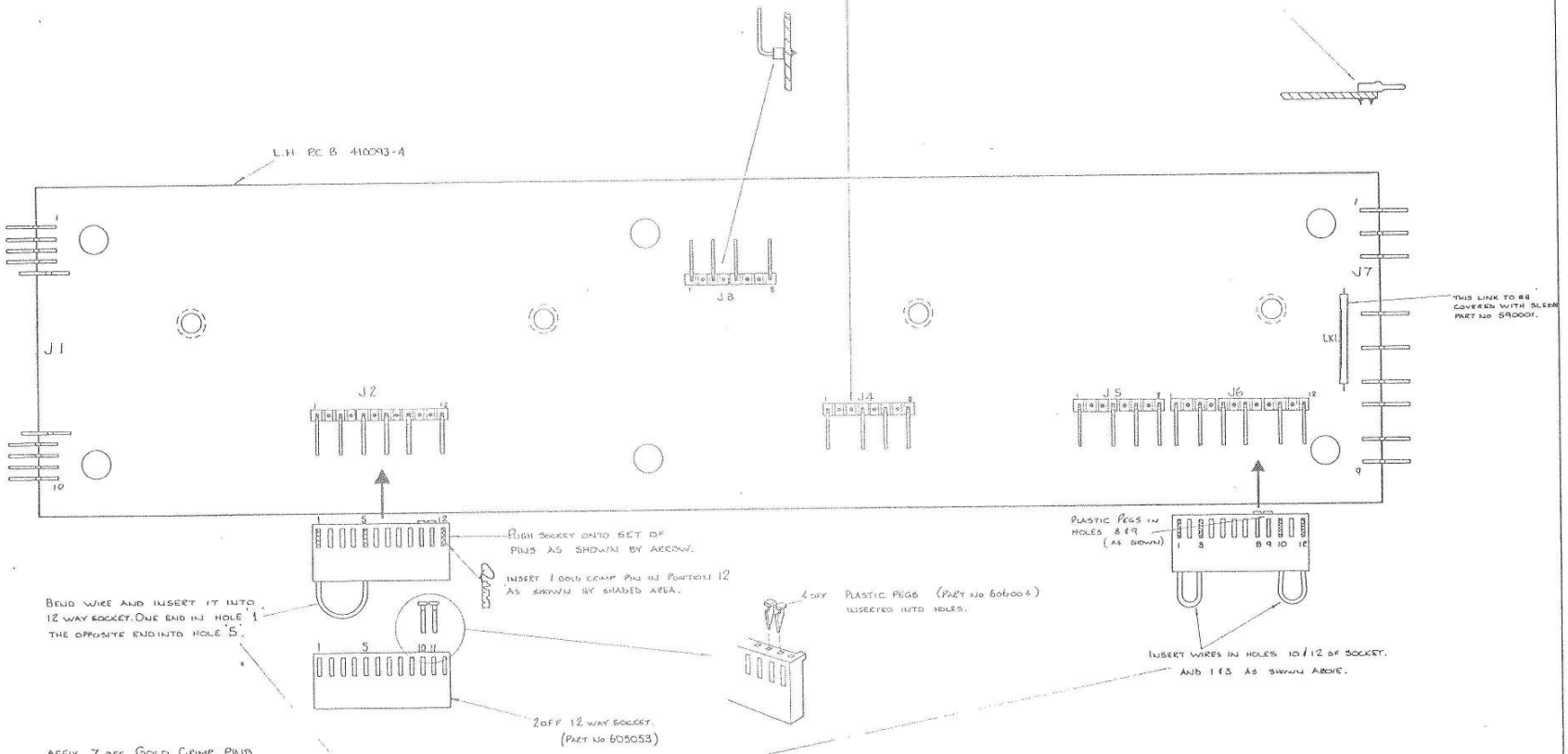

DRAWN	CHECKED	DIMENSIONS IN	TOLERANCES	MATERIAL
B.J		MILLIMETRES	INCH DIMENSIONS ANGULAR ° ' DECIMAL TO 1 PLACES ± .005 DECIMAL TO 2 PLACES ± .010 FRACTIONAL ± 1/64	
TRACED	APPROVED	SCALE 2:1 NOT TO BE SCALED	METRIC DIMENSIONS DECIMAL TO 2 PLACES ± 1mm DECIMAL TO 1 PLACE ± 2mm WHOLE DIMENSIONS ± 4mm UNLESS OTHERWISE STATED	FINISH
DATE 21-4-78	DATE			

datron ELECTRONICS LTD. NORWICH.

DRAWING SIZE A1

TITLE 1061/71/81 L.H. P.C.B. ASSEMBLY

DRAWING No. 400297

SHEET 1 OF

DRAWING No. 430297

FIRST USED ON 1061/1071

THIRD ANGLE PROJECTION

DRAWN IN ACCORDANCE WITH BS 308

ALL BURRS TO BE REMOVED

NOTES

1/ ALL CIRCUIT TO BE ON THE COMPONENT (SHEET 3) SIDE OF P.C.B WHERE POSSIBLE.

2/ INPUT GUARD, VIA J7-1 TO PROVIDE ELECTROSTATIC SHIELD ON CIRCUIT (SHEET 2) SIDE OF P.C.B. WHERE POSSIBLE.

3/ B.S, VIA J3-5, TO ENCLOSE Hi AND I+ CIRCUITS ON P.C.B WHERE POSSIBLE.

4/ Ω GUARD VIA J3-3 TO ENCLOSE LO & I- CIRCUITS ON PCB WHERE POSSIBLE.

ISS.	CHANGES
D	
1	RELEASED TO PROD'N. 29-5-78

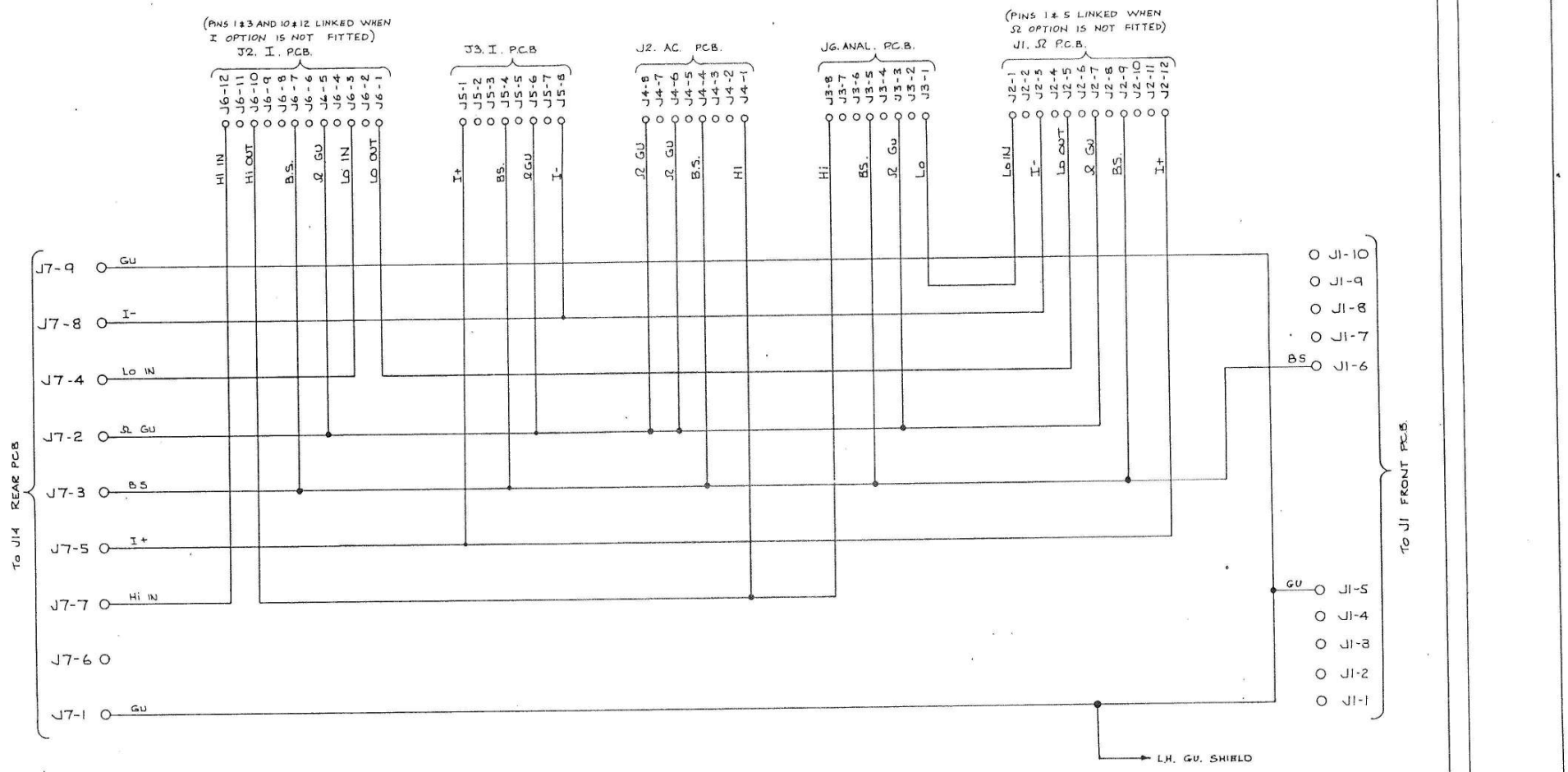

DRAWN B.J.	CHECKED DCJ	DIMENSIONS IN MILLIMETRES	TOLERANCES ANGULAR ± ½° INCH DIMENSIONS DECIMAL TO 3 PLACES ± .005; DECIMAL TO 2 PLACES ± .010; FRACTIONAL ± 1/64. METRIC DIMENSIONS DECIMAL TO 2 PLACES ± 1mm; DECIMAL TO 1 PLACE ± 2mm; WHOLE DIMENSIONS ± 4mm. UNLESS OTHERWISE STATED	MATERIAL	datron ELECTRONICS LTD. NORWICH.	DRAWING SIZE A2
TRACED	APPROVED	SCALE NOT TO BE SCALED		FINISH	TITLE L.H. P.C.B. SCHEMATIC 1061/1071/1081	DRAWING No. 430297
DATE 30.5.78	DATE					SHEET 1 OF 1

DRAWING No. 400298

FIRST USED ON 1061/71

THIRD ANGLE PROJECTION

DRAWN IN ACCORDANCE WITH BS 308

ALL BURRS TO BE REMOVED

NOTES

ISS.	CHANGES
C	
D	NEW ISSUE P.C.B. B.J. 24-8-78
1	RELEASED TO PROD'N 25-5-78.
2	ECO 850. 4-5-79 UPDATED P.C.B. B.J. J1-6 WAS REMOVED.
3	ECO 867 & 504. B.J. UPDATED P.C.B. CABLE ASSY 400365 CHANGED TO 574270/A
4	ECO 943. 10.9.79 RIBBON CABLE ASSY. WAS 574250/A IL
5	ECO 1217 J2 WAS 400365. UR 18-8-81
6	ECO 1474 PCB ISSUE No WAS 4 IL 3.6.83

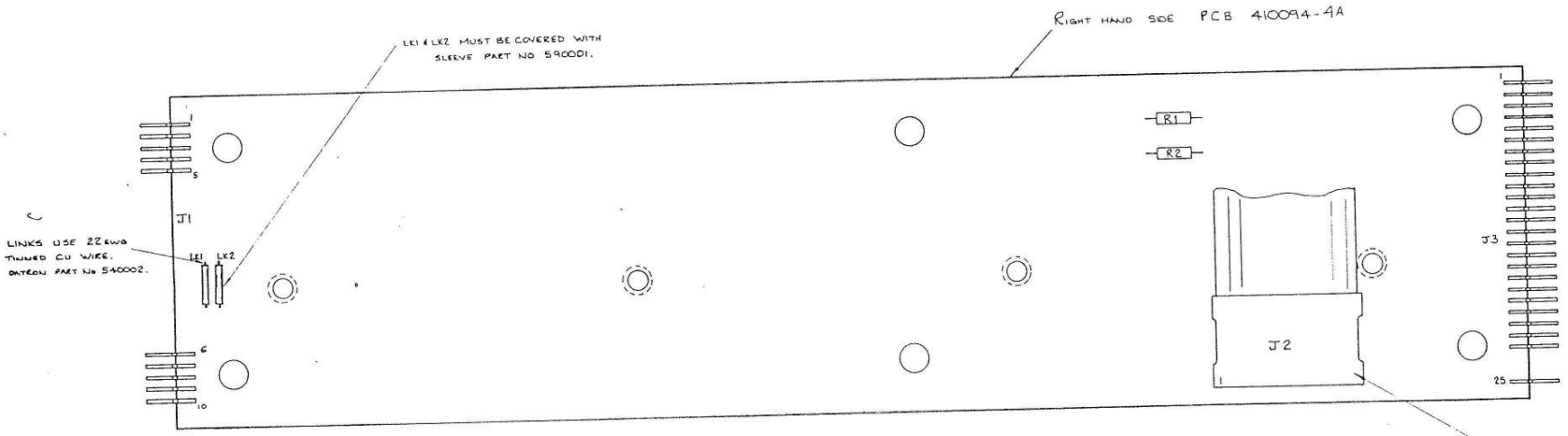

RIBBON CABLE ASSY
PART No 574270/C

NOTE WHEN SOLDERING CABLE PLUG INTO BOARD ENSURE THAT THE PLUG BODY SITS FLAT AGAINST PCB.

AFTER ASSEMBLING PCB WRAP THE ABOVE RIBBON CABLE ROUND THE PCB AND TAPE DOWN USING MASKING TAPE PART No 630099.

IMPORTANT

AMP PINS (DATRON PART No. 604036.) 4 OFF MUST BE AFFIXED TO P.C.B FIRST.
ENSURE ALL PINS ARE SEATING TIGHTLY AND FLAT TO PCB BEFORE SOLDERING.

NOTE. PINS ARE HELD TOGETHER BY PLASTIC STRIP. THIS STRIP IS TO BE CUT TO SUIT THE AMOUNT OF PINS REQUIRED.

FOR EXAMPLE. ABOVE 2 BLOCKS OF 5 PINS ARE REQUIRED, THEREFORE STRIP OF 10 PINS TO BE CUT IN HALF.

DRAWN	CHECKED	DIMENSIONS IN MILLIMETRES	TOLERANCES ANGULAR ± INCH DIMENSIONS DECIMAL TO 3 PLACES ± .005 DECIMAL TO 2 PLACES ± .010 FRACTIONAL ± 1/64 METRIC DIMENSIONS DECIMAL TO 2 PLACES ± 1mm DECIMAL TO 1 PLACE ± 2mm WHOLE DIMENSIONS ± 4mm UNLESS OTHERWISE STATED	MATERIAL
B.J.				
TRACED	APPROVED	SCALE 2:1 NOT TO BE SCALED		FINISH
DATE 20-4-78.	DATE			

datron ELECTRONICS LTD. NORWICH.

TITLE 1061/71/81. R.H. P.C.B. ASSEMBLY.

DRAWING SIZE A1

DRAWING No. 400298

SHEET 1 of 2

DRAWING No.	THIRD ANGLE PROJECTION
430298	DRAWN IN ACCORDANCE WITH BS 308
FIRST USED ON 1061 / 1071	

ALL BURRS TO BE REMOVED

NOTES

ISS	CHANGES
D	
1C	RELEASED TO PROD 20-5-78
2	D.A. COM. SCREEN REMOVED. B.J. ECO 850 4-9-78

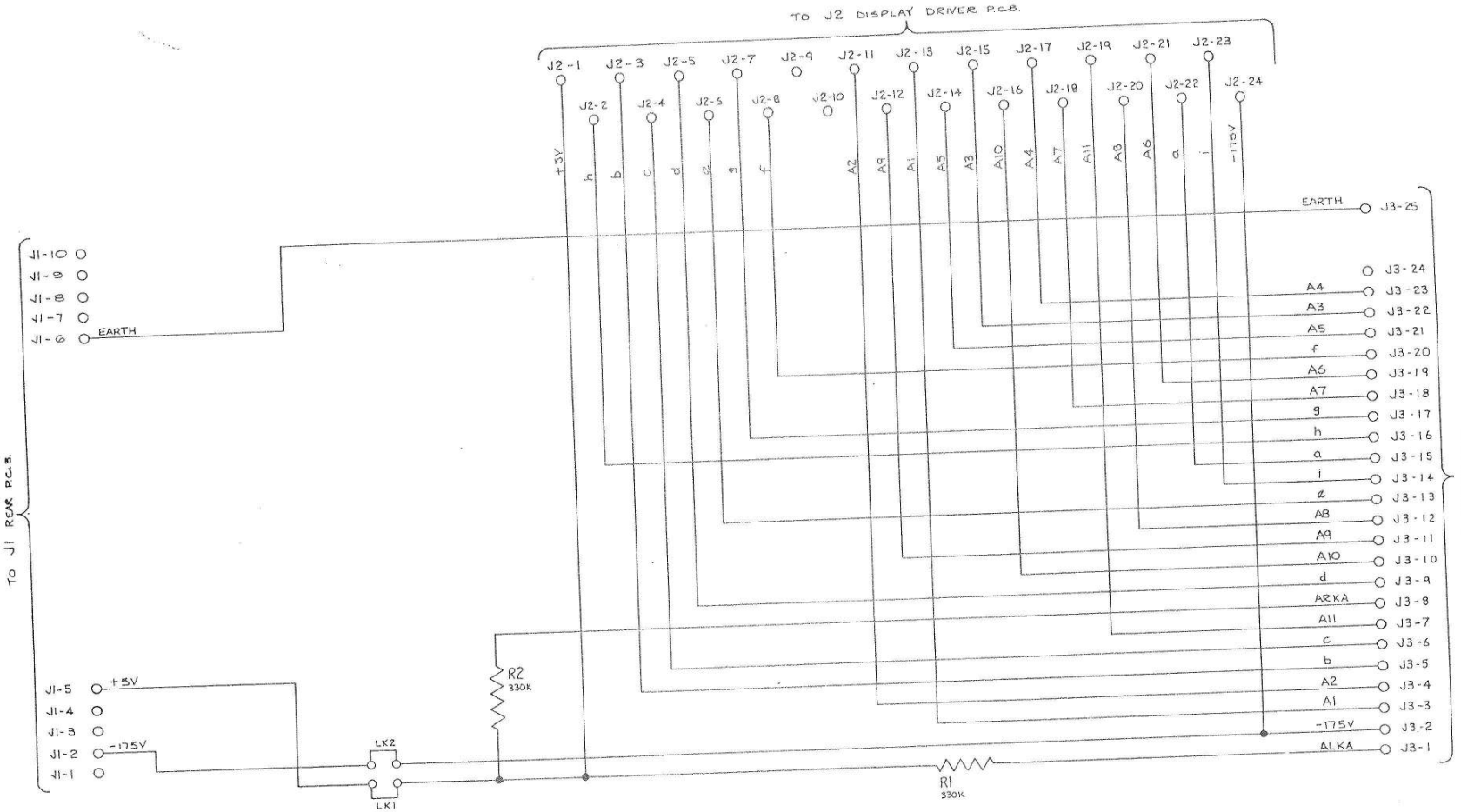

DRAWN	CHECKED	DIMENSIONS IN	TOLERANCES	MATERIAL
B.J.	DCJ	MILLIMETRES	INCH DIMENSIONS DECIMAL TO 3 PLACES ± .005; DECIMAL TO 2 PLACES ± .010; FRACTIONAL ± 1/64; METRIC DIMENSIONS DECIMAL TO 2 PLACES ± 1mm; DECIMAL TO 1 PLACE ± 2mm; WHOLE DIMENSIONS ± 4mm; UNLESS OTHERWISE STATED; ANGULAR ± 1°	
TRACED	APPROVED	SCALE		FINISH
DATE 26-5-78	DATE	NOT TO BE SCALED		

datron ELECTRONICS LTD. NORWICH.

TITLE: R.H. SIDE P.C.B. SCHEMATIC. 1061/1071/1081

DRAWING No. 430298

SHEET 1 OF 1

DRAWING SIZE A2

DRAWING No. 400304

FIRST USED ON 1061/1071

THIRD ANGLE PROJECTION

DRAWN IN ACCORDANCE WITH BS 308

ALL BURRS TO BE REMOVED

NOTES

R25 NOTE

* IMPORTANT NOTE!

R25 RESISTOR TO BE FITTED LAST SO THAT RL3 & RL4 WIRING TO P.C.B. CAN BE DONE WITH EASE.

CURRENT OPTION FUSE ASSEMBLY

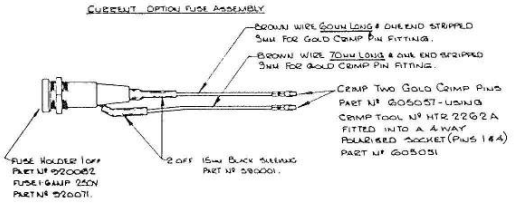

OHMS GUARD LEAD DETAIL

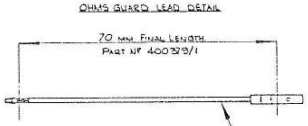

NYLATCH ASSEMBLY (4 POSITIONS)

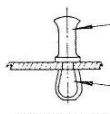

SECTION A-A TYPICAL

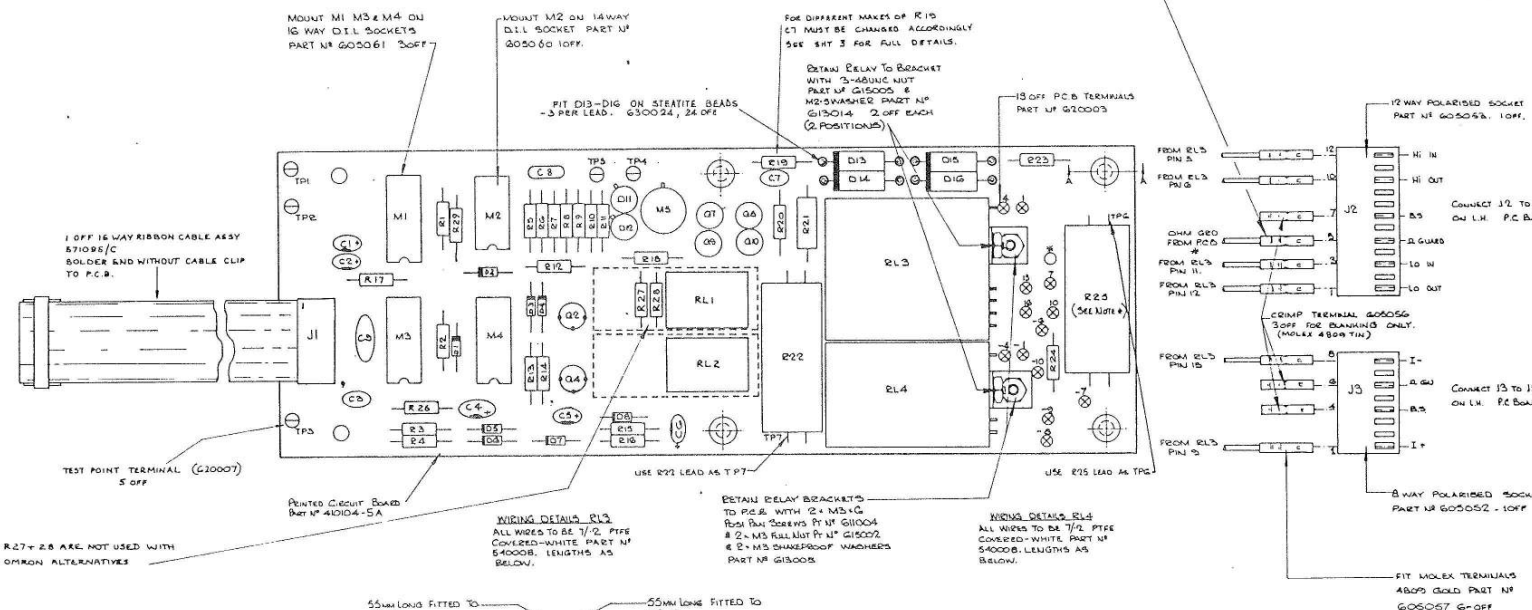

WIRING DETAILS RL3

ALL WIRES TO BE 7/2 PTFE COVERED-WHITE PART Nº 510008. LENGTHS AS BELOW.

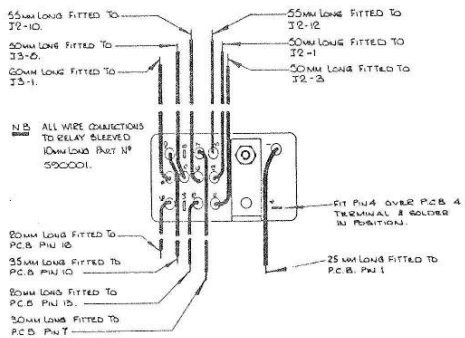

WIRING DETAILS RL4

ALL WIRES TO BE 7/2 PTFE COVERED-WHITE PART Nº 510008. LENGTHS AS BELOW.

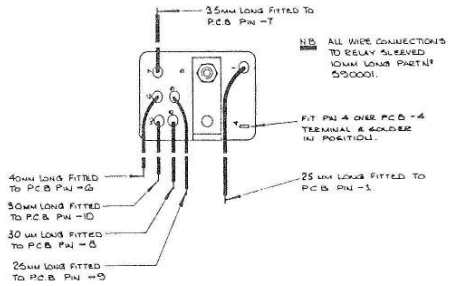

ISS	CHANGES
A	17 JULY 79 WAS
B	C1 POSITION CHANGED P.C.B WAS ISSUE 2. R9 & C4 VALUES CHANGED W.B.E 21 AUG 79.
C	STEATITE BEADS ADDED, TO MOUNT D13 - D16 24 OFF. IL 24.9.79
1	RELEASED TO PRODUCTION. 24.9.79
2	ECO 572 + 587. RL3 & RL4 WERE 1 FT. RELAY WIRING WAS P/C. RJ. 25-10-79.
3	ECO'S 1000, 1012, 1037 & 1036 RIBBON CABLE CLIP WAS 606007. CABLE WAS 571095/A. FUSE HOLDER WAS 920047 C7 WAS 2n2F NOT ADDED. R20, R9, D5, D10, Q5 & Q6 DELETED. RJ. 4-11-80.
4	ECO 1068 R26-R28 ADDED IL 17.1.80
5	ECO. 1095, 1110, 1087 J2-7 J3-4 & J3-6 WERE 605057 D17 & D18 REMOVED C8 ADDED IL 18.4.80
6	ECO. 1116 R29 ADDED. CUT TRACK ON PCB BETWEEN N28 & 4-11-9 PARTS LIST CHANGE TO C2 IL 5.6.80
7	ECO. 1180 OHMS GUARD LEAD WAS 400379/2 IL 17.12.80
8	ECO 1080 R8, 9, Q9 ADDED R 12 WAS 1K R 13, 7 WERE 12K R 5 & 14 WERE 27K R 24, 27, 28 WERE 10K R 17 WAS 1M Q1, Q3, AN1, LK1 DELETED JR 25.2.81
9	ECO 1217 J1 WAS 16 WAY SOCKET. JR 18-6-81
10	ECO 1257 R 27 + 28 WERE 330 R. JR 24-11-81
11	ECO 1520 D13, D14, D15 AND D16 WERE 200010. PCB WAS ISSUE 5. JR 10.5.83.

DRAWN W.G SMITH	CHECKED	DIMENSIONS IN MILLIMETRES	TOLERANCES INCH DIMENSIONS DECIMAL TO 1 PLACES ± .005; DECIMAL TO 2 PLACES ± .010; FRACTIONAL ± 1/64; METRIC DIMENSIONS DECIMAL TO 1 PLACE ± 1mm; DECIMAL TO 2 PLACE ± 2mm; WHOLE DIMENSIONS ± 4mm; UNLESS OTHERWISE STATED; ANGULAR ° '	MATERIAL	datron ELECTRONICS LTD. NORWICH.	DRAWING SIZE A1
TRACED	APPROVED	SCALE NOT TO BE SCALED		FINISH	TITLE CURRENT PC BOARD LAYOUT 1061/1071	DRAWING No. 400304 SHEET 1 OF 7
DATE 18 JULY 79	DATE					

DRAWING No	430304
FIRST USED ON	10G1/1071

THIRD ANGLE PROJECTION

DRAWN IN ACCORDANCE WITH BS 308

ALL BURRS TO BE REMOVED

NOTES

ISS.	CHANGES
A	18 JULY 78 W.G.S.
B	R2 WAS 1M0 - 000105 C4 WAS 10nF 250v CAT 1N 161103 WGS 21.AUG.79
1	RELEASED TO PRODUCTION 24.9.79
2	ECO 1037 & 1038 SEE SHEET 2.
3	SEE SHEET 2 ECO. 1048 18.1.80
4	ECO. 1087, 1110 C8 ADDED 14.4.80
5	ECO. 1116 R29 ADDED. C8 WAS 1nF. 3.6.80
6	ECO 1080 R13, R14, Q1, Q3 + AN1 DELETED R5-7 C4 MOVED C9 R17, R26-R28 ADDED JR 26.2.81
7	ECO 1257 R27 AND R28 WERE 330R JR 24.11.81

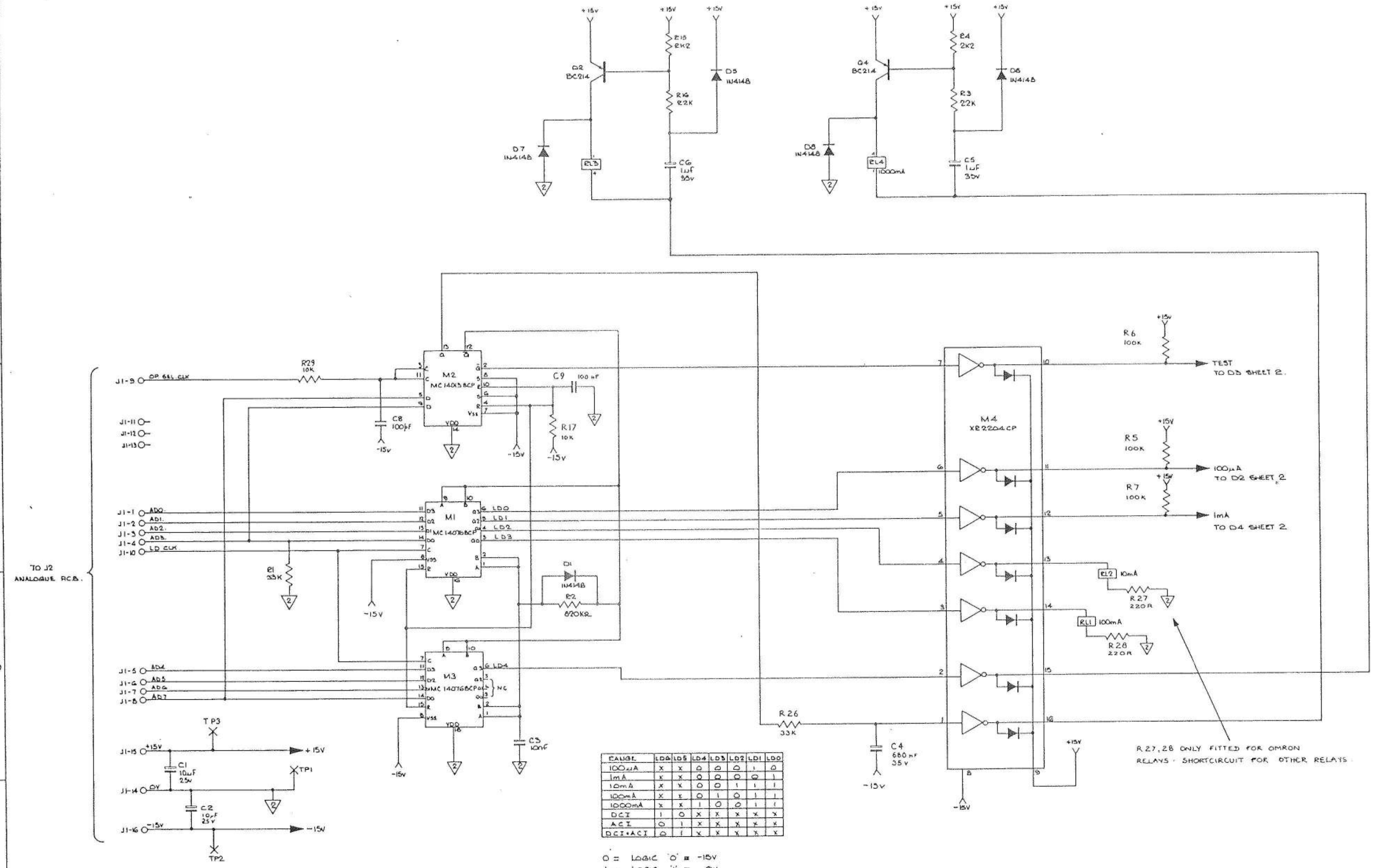

RANGE	LD6	LD5	LD4	LD3	LD2	LD1	LD0
100uA	X	X	0	0	0	1	0
1mA	X	X	0	0	0	0	1
10mA	X	X	0	0	1	1	1
100mA	X	X	0	1	0	1	1
1000mA	X	X	1	0	0	1	1
DCI	1	0	X	X	X	X	X
ACI	0	1	X	X	X	X	X
DCI+ACI	0	1	X	X	X	X	X

0 = LOGIC '0' ≡ -15V

1 = LOGIC '1' ≡ 0V

X = DONT CARE CONDITION

DRAWN	CHECKED	DIMENSIONS IN	TOLERANCES	MATERIAL
W.G.SMITH		MILLIMETRES	INCH DIMENSIONS DECIMAL TO 3 PLACES ± .005; DECIMAL TO 2 PLACES ± .010; FRACTIONAL ± 1/64; ANGULAR ± °	
TRACED	APPROVED	SCALE	METRIC DIMENSIONS DECIMAL TO 2 PLACES ± 1mm; DECIMAL TO 1 PLACE ± 2mm; WHOLE DIMENSIONS ± 4mm; UNLESS OTHERWISE STATED	FINISH
DATE 20 JULY 79	DATE	NOT TO BE SCALED		

datron ELECTRONICS LTD. NORWICH.

TITLE: CURRENT PC BOARD CIRCUIT DIAGRAM 10G1-1071

DRAWING SIZE A1

DRAWING No 430304

SHEET 1 OF 2

DRAWING No 430304

FIRST USED ON 1061/1071

THIRD ANGLE PROJECTION

DRAWN IN ACCORDANCE WITH BS 308

ALL BURRS TO BE REMOVED

NOTES

1. 470pF IF R19 MANUFACTURED BY MANN COMP.
330pF " " " " KELVIN.

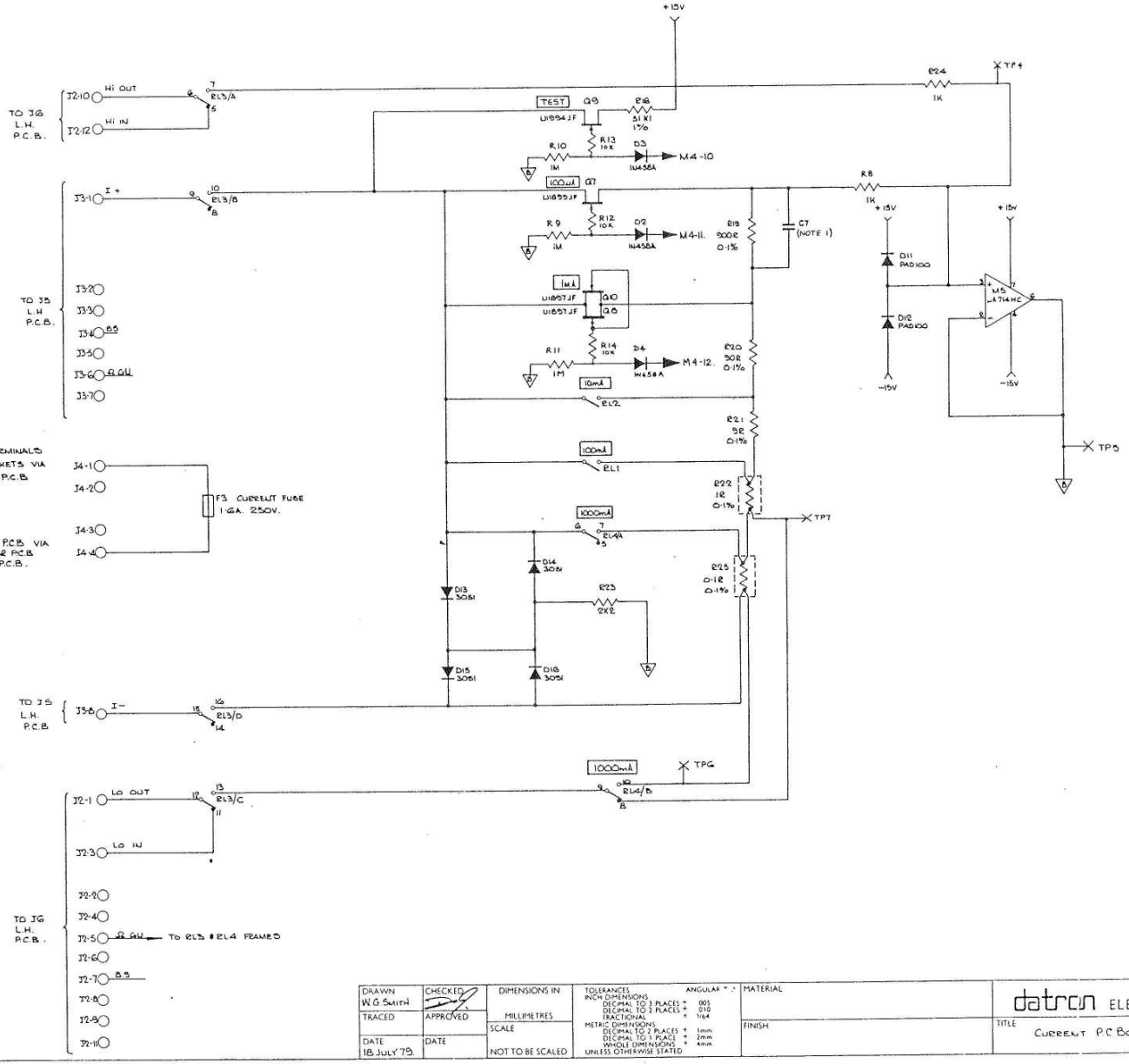

ISS	CHANGES
A	18 JULY 79 W.G.S
B	SEE SHT 1
1	RELEASED TO PRODUCTION 24.9.79
2	ECO 1037 & 1038 C7 WAS 2n2F. R8, R9, D5, D10, Q5, & Q6 DELETED B.J 4.1.80
3	ECO 1048 R26-R28 ADDED 18.1.80
4	ECO 1087 D17 D18 REMOVED 14.4.80
5	SEE SHEET 1
6	ECO 1080 R12-14 TRACKED IN TO P.C.B. DESIGNATORS REDEFINED. JR 26.2.81
7	SEE SHEET 1

DRAWN	CHECKED	DIMENSIONS IN	TOLERANCES	MATERIAL
W.G. SMITH		MILLIMETRES	INCH DIMENSIONS: DECIMAL TO 3 PLACES ± .005; DECIMAL TO 2 PLACES ± .010; FRACTIONAL ± 1/64	
TRACED	APPROVED	SCALE	METRIC DIMENSIONS: DECIMAL TO 2 PLACES ± 1mm; DECIMAL TO 1 PLACE ± 2mm; WHOLE DIMENSIONS ± 4mm	FINISH
DATE 18 JULY 79.	DATE	NOT TO BE SCALED	UNLESS OTHERWISE STATED	

datron ELECTRONICS LTD. NORWICH.

TITLE: CURRENT P.C BOARD CIRCUIT DIAGRAM - 1061-1071

DRAWING SIZE A1

DRAWING No 430304

SHEET 2 OF 2

DRAWING No.	400307
FIRST USED ON	1061/1071

THIRD ANGLE PROJECTION

DRAWN IN ACCORDANCE WITH BS 308

ALL BURRS TO BE REMOVED

NOTES

IMPORTANT.
FOR CRIMP PINS USE TOOL N° HTR2262A.

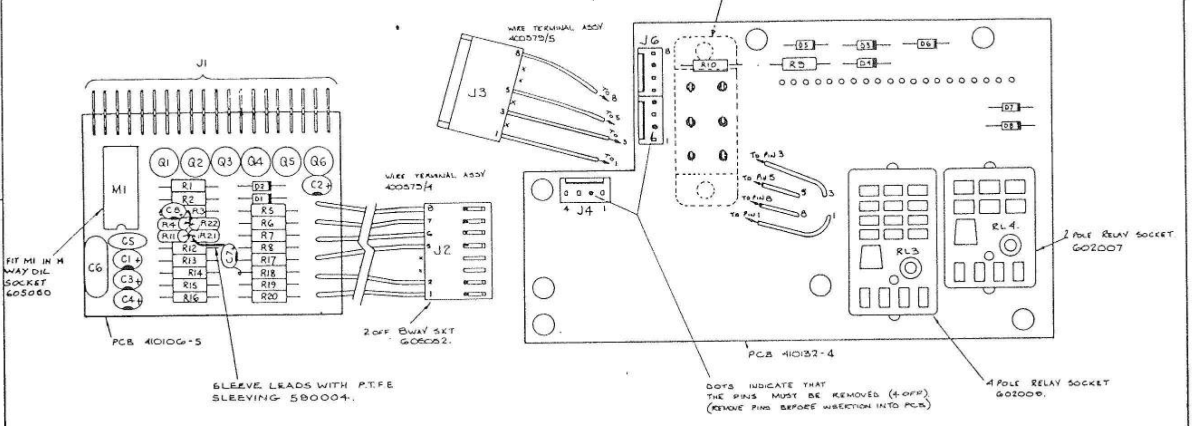

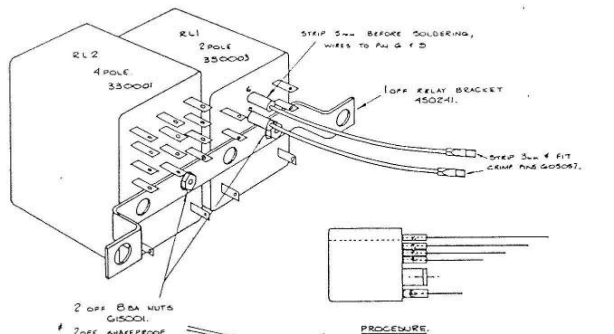

PROCEDURE.
1/ FIT BOTH RELAYS TO THE BRACKET (AS SHOWN) WITH WASHER & NUT.
2/ ON PINS 6 & 5 OF THE TWO POLE RELAY SOLDER 70mm OF WHITE WIRE PART No 540008 SLEEVE WITH ½ PIECE OF 550001 (18 10mm).
3/ ALL OTHER CONTACTS ARE TO HAVE APPROXIMATELY 60mm OF 22 SWG TINNED COPPER WIRE PART N° 540002 & SLEEVE EACH WITH ½ PIECE OF 550001.
4/ STAGGER LENGTHS OF TINNED COPPER WIRE, TO ASSIST FITTING TO PCB, AS SHOWN.

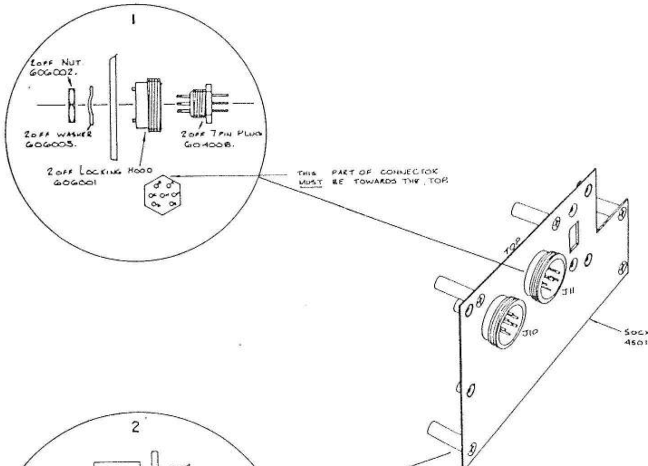

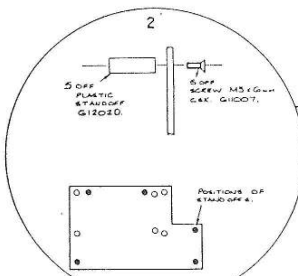

PROCEDURE
1/ ASSEMBLE THE 7 PIN PYE PLUGS. FIRST & ENSURE THAT THE CONNECTORS ARE SECURED IN THE POSITION SHOWN.

2/ ASSEMBLE THE 5 STANDOFF'S IN THE POSITION SHOWN BY THE LARGE DOTS.

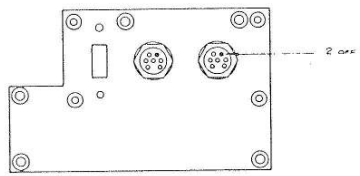

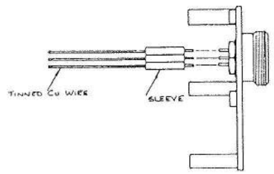

PROCEDURE
1/ ALL PINS ON EACH SOCKET EXCEPT PIN B (SHOWN SOLID), SOLDER ON 60mm OF TINNED COPPER WIRE PART N° 540002 & SLEEVE ALL JOINTS WITH APPROXIMATELY 16mm OF SLEEVING PART No 550001.
THERE SHOULD NOW BE 12 WIRES.

ISS.	CHANGES
1	RELEASED 26-3-79
2	LK1 BRACKET BY 610000... DE DALATED E.C.O. 502/087 3 JAN 79 WBS
3	ECO 572. 25-10-79 RL1, RL2, RL3 & RL4 WERE ITT B.J.
4	ECO 581. 6-11-79. R5 WAS 33K. R10 WAS 100 R11 & R12 ADDED D7 ADDED D5 DELETED 400575/4 ... PCBS UPDATED
5	ECO 1071. 1054. R18 MOVED & WAS 33K NOW 1M. LK1 ADDED. D7 & R10 DELETED R8 WAS 18K. BJ 7-1-80
6	ECO 1085 POLARISING KEY FOR J3 REMOVED J4 WAS 8WAY CONN J5 REMOVED - SEE SHEET 2. IL 22.4.80
7	ECO. 1166 1154. R1 WAS 18K. R10, R13, R14, R15, R16, R17, R18, R19, R20, C3, C4, C5, C6, D5, D6, D7, Q5, Q6 & LK1 ADDED. IL 24.8.80
8	ECO 1199 R10 WAS 12 K JR 24.2.81
9	ECO 1329 R21, R22, C7 AND C8 ADDED. PART LIST CHANGES. JR 8.7.82

DRAWN	CHECKED	DIMENSIONS IN	TOLERANCES	MATERIAL
B J		MILLIMETRES	INCH DIMENSIONS: DECIMAL TO 3 PLACES ± .005; DECIMAL TO 2 PLACES ± .010; FRACTIONAL ± 1/64. ANGULAR ± °	
TRACED	APPROVED	SCALE	METRIC DIMENSIONS: DECIMAL TO 2 PLACES ± .1mm; DECIMAL TO 1 PLACE ± .2mm; WHOLE DIMENSIONS ± .4mm	FINISH
DATE 23-2-79	DATE	NOT TO BE SCALED	UNLESS OTHERWISE STATED	

datron ELECTRONICS LTD. NORWICH.

TITLE: REAR INPUT / RATIO ASSY

DRAWING SIZE: A1

DRAWING No. 400307 — SHEET 1 OF 8

DRAWING No. 400307

FIRST USED ON 1061/71

THIRD ANGLE PROJECTION

DRAWN IN ACCORDANCE WITH BS 308

ALL BURRS TO BE REMOVED

NOTES

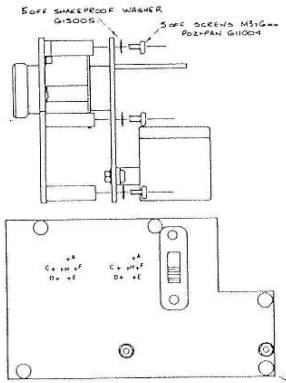

3./ BOTTOM VIEW SHOWS THE HOLES IN THE P.C.B (INDICATED BY CROSSES). THESE HOLES ARE FOR THE WIRES FROM THE TWO 7 PIN SOCKETS
IT IS A SUGGESTION THAT THE WIRES ARE STAGGERED TO MAKE ASSY EASIER (AS WIRING THE RELAYS).

PROCEDURE.

① THE WIRES SHOULD LINE UP WITH THE APPROPRIATE HOLES. I.E. WIRE FROM PIN 'A' OF SOCKET SHOULD BE INSERTED INTO HOLE 'A', WIRE FROM PIN 'C' TO HOLE 'C' AND SO ON.

② WHEN THE WIRES ARE INSERTED IN THE APPROPRIATE HOLES. SECURE THE 2 ASSYS TOGETHER WITH THE M3x6mm POZI PAN SCREWS & SHAKEPROOF WASHERS, SCREWED IN THE 5 STANDOFFS. (AS DETAILED)

③ LIGHTLY PULL ON THE TIN COPPER WIRES SO THE WIRE IS TAUT, THEN SOLDER & CROP IN THE USUAL MANNER.

2./ INSERT CONNECTORS AS SHOWN.
SOLDER ALL 20 AMP PINS & CROP LEGS IN USUAL MANNER.
THE BOARD IS TO BE AT 90° WHEN SOLDERED IN.

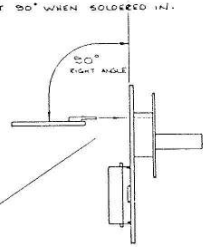

1./ SKETCH BELOW SHOWS THE 2 RELAY & BRACKET ASSEMBLY (FROM SHEET 1). THE CROSSES INDICATE HOLES IN THE P.C.B INTO WHICH THE WIRES FROM THE RELAYS ARE INSERTED.

PROCEDURE

① INSERT THE WIRES INTO THE APPROPRIATE HOLES IN THE PCB (WIRE'S CUT AT DIFFERENT LENGTHS TO AID ASSEMBLY).

② WHEN THE WIRES ARE ALL IN PLACE SECURE THE BRACKET TO THE PCB USING THE SCREWS, WASHERS & NUTS SHOWN BELOW.

③ SOLDER & CROP WIRES IN THE USUAL MANNER. INSERT THE CRIMP PINS INTO SOCKET J5 PIN 6 OF RELAY TO PIN 4 OF J5 & PIN 9 TO PIN 1 AS SHOWN BELOW.

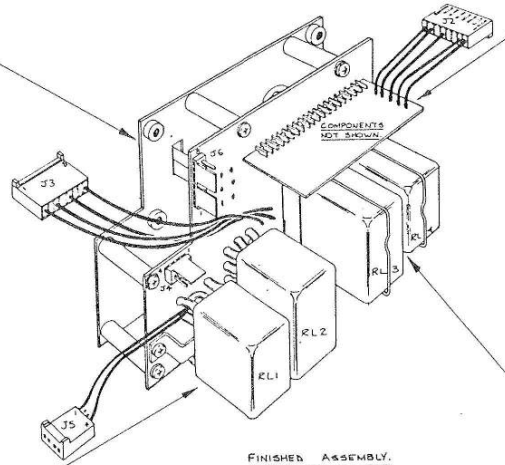

FINISHED ASSEMBLY.

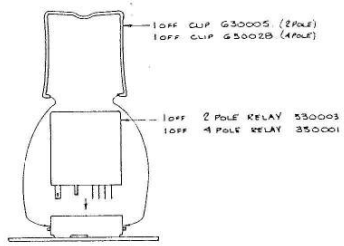

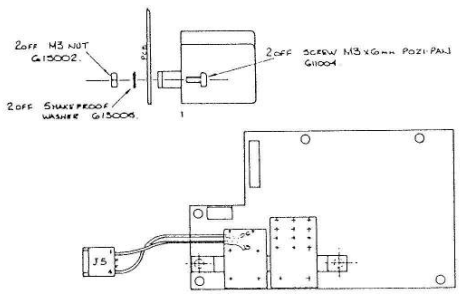

4./ THE LAST PROCEDURE IS TO PLUG IN THE 4 & 2 POLE RELAYS & HOLD IN PLACE BY THE CLIPS PROVIDED AS DETAILED IN ABOVE SKETCH & FINISHED VIEW.

ISS	CHANGES	
A		
1	RELEASED 26-3-79	
2	ECO 90/2 SEE SHT 1 5-JUNE 79 N.G.S.	MD
3	SEE SHT 1 26-10-79	MD
4	SEE SHT 1 6-11-79	MD
5	SEE SHT 1 2-1-80	MD
6	ECO 1083 J5 WAS 8 WAY CONN. IL 22.4.80	MD
7	SEE SHEET 1 26.3.80	MD
8	SEE SHEET 1 26.2.81	MD
9	SEE SHT 1	MD

DRAWN BJ	CHECKED MJD	DIMENSIONS IN MILLIMETRES	TOLERANCES ANGULAR ± ± INCH DIMENSIONS DECIMAL TO 3 PLACES ± .005 DECIMAL TO 2 PLACES ± .010 FRACTIONAL ± 1/64 METRIC DIMENSIONS DECIMAL TO 2 PLACES ± 1mm DECIMAL TO 1 PLACE ± 2mm WHOLE DIMENSIONS ± 4mm UNLESS OTHERWISE STATED	MATERIAL —	datron ELECTRONICS LTD. NORWICH.
TRACED	APPROVED	SCALE		FINISH —	TITLE REAR INPUT / RATIO ASSY
DATE 2-3-79	DATE	NOT TO BE SCALED			DRAWING No. 400307

DRAWING SIZE A1

SHEET 2 OF 8

DRAWING No. 430307

FIRST USED ON 1061/1071

THIRD ANGLE PROJECTION

DRAWN IN ACCORDANCE WITH BS 308

ALL BURRS TO BE REMOVED

NOTES

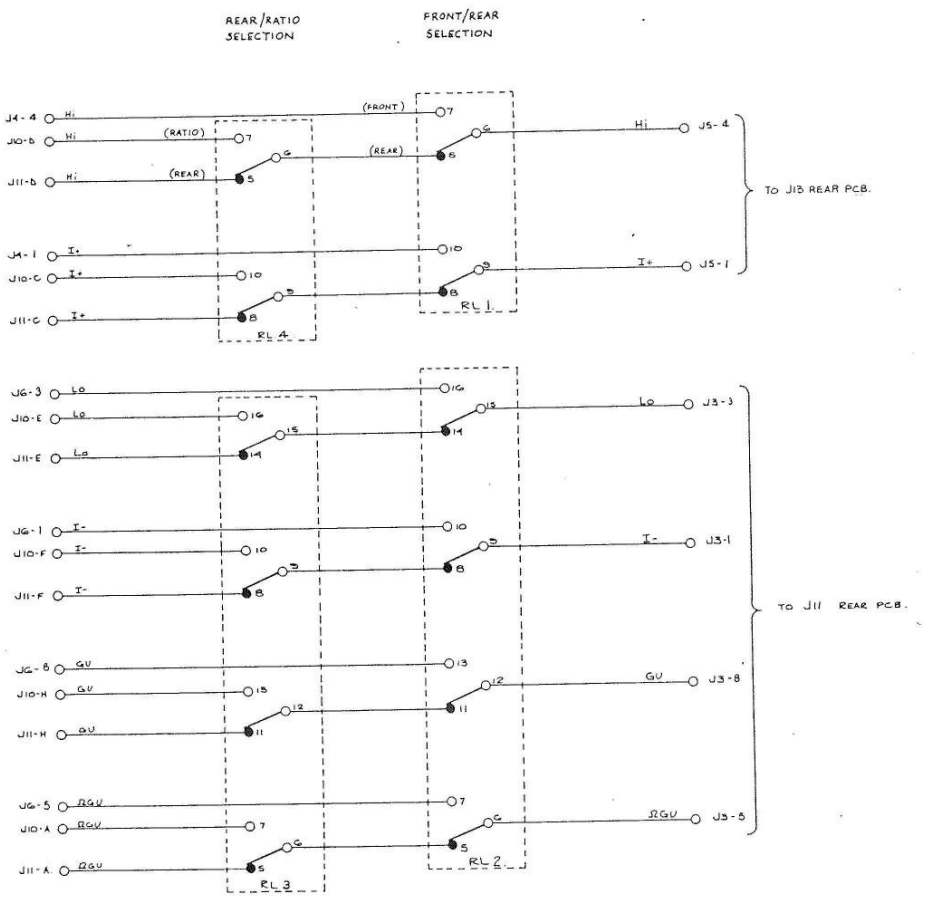

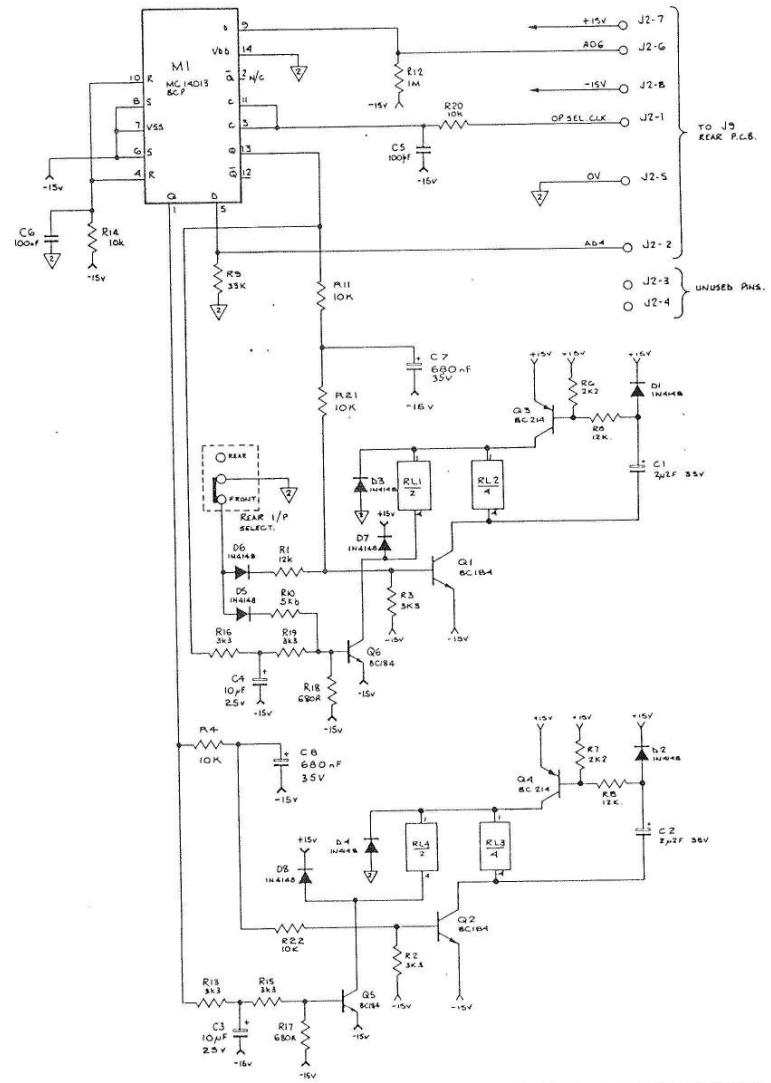

NOTE: J4 & J6 ARE FROM THE FRONT PANEL TERMINALS.

J10 IS THE RATIO INPUT SOCKET ON REAR PANEL.

J11. IS THE REAR INPUT SOCKET ON REAR PANEL.

ISS.	CHANGES
1	RELEASED 26-3-79
2	LK1 REPLACED BY R10 10K. D6 DELETED. ECO 800/887 5 JAN 79 W.G.S.
3	ECO 981. 6-11-79. B.J. R9 WAS 33K. R10 " 10Ω. R11 & R12 ADDED. D7 ADDED. 10 OFF 400379/4 ADDED. D5 DELETED.
4	ECO 1021 & 1054. B.J. R12 WAS JOINED TO J2-6 & M1-14. LK1 ADDED. R9 WAS 18K. D7 & R10 DELETED. 2-1-80
5	ECO. 1085 BS. BETWEEN J4-1 & J5-1 REMOVED PINS OF J4 & J5 RE-NUMBERED FOR 4 WAY CONNECTORS 22-4-80
6	ECO. 1166, 1154 R1 WAS 18K. R10, R13, R14, R15, R16, R17, R18, R19, R20, C3, C4, C5, C6, D5, D6, D7, D8, Q3, Q6, ADDED 24-9-80
7	ECO 1199 R10 WAS 12K. JR 26-2-81
8	ECO 1329 C3 AND C4 WERE 6μ8F. R4 AND R11 WERE 18K. C7, C8, R21 AND R22 ADDED. JR 8-7-82.

DRAWN	CHECKED	DIMENSIONS IN	TOLERANCES	MATERIAL	datron ELECTRONICS LTD. NORWICH.	DRAWING SIZE
B J		MILLIMETRES	INCH DIMENSIONS: DECIMAL TO 3 PLACES ± .005; DECIMAL TO 2 PLACES ± .010; FRACTIONAL ± 1/64			A1
TRACED	APPROVED	SCALE	METRIC DIMENSIONS: DECIMAL TO 2 PLACES ± 1mm; DECIMAL TO 1 PLACE ± 2mm; WHOLE DIMENSIONS ± 4mm	FINISH	TITLE: REAR INPUT / RATIO CIRCUIT.	DRAWING No. 430307
DATE 9-3-79	DATE	NOT TO BE SCALED	UNLESS OTHERWISE STATED			SHEET 1 OF 1

DRAWING No.	FIRST USED ON
400308.	1061 – 1071

THIRD ANGLE PROJECTION

DRAWN IN ACCORDANCE WITH BS 308

ALL BURRS TO BE REMOVED

NOTES

ISS.	CHANGES
1	RELEASED. 27-DEC-78. W.O.S.
2	POSITION OF TAG ON M1 & M2 CORRECTED. D2 POSITION REVERSED. ECO. 907 20.6.79 IL.
3	PARTS LIST CHANGE TO R7 ECO. 945 10.9.79 IL.

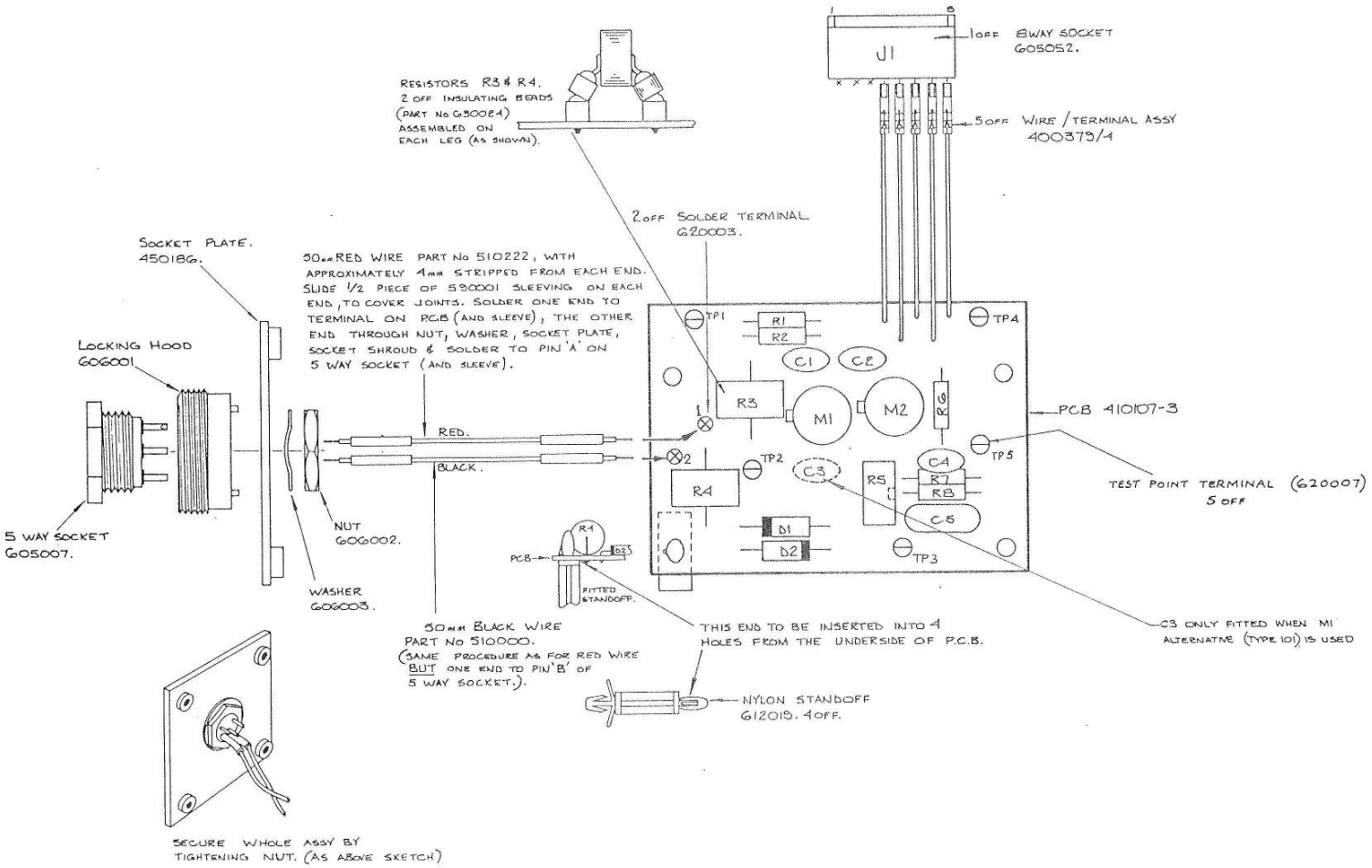

DRAWN	CHECKED	DIMENSIONS IN	TOLERANCES ANGULAR ± ½°	MATERIAL
B.J.	M.K. 27.11.78	MILLIMETRES	INCH DIMENSIONS DECIMAL TO 3 PLACES ± .005; DECIMAL TO 2 PLACES ± .010; FRACTIONAL ± 1/64	
TRACED	APPROVED	SCALE	METRIC DIMENSIONS DECIMAL TO 2 PLACES ± 1mm; DECIMAL TO 1 PLACE ± 2mm; WHOLE DIMENSIONS ± 4mm	FINISH
DATE 27-11-78	DATE	2:1 NOT TO BE SCALED	UNLESS OTHERWISE STATED	

datron ELECTRONICS LTD. NORWICH.

DRAWING SIZE A2

TITLE: ANALOGUE OUTPUT P.C.B ASSY. 1061/1071/1081

DRAWING No. 400308

SHEET 1 OF 4

DRAWING No.	THIRD ANGLE PROJECTION	ALL BURRS TO BE REMOVED	NOTES
430308	DRAWN IN ACCORDANCE WITH BS 308		
FIRST USED ON 1061 - 1071			

ISS.	CHANGES
1	RELEASED. 27-DEC-78. W.G.S
2	R7 WAS 21K73 ECO. 945 10.9.79

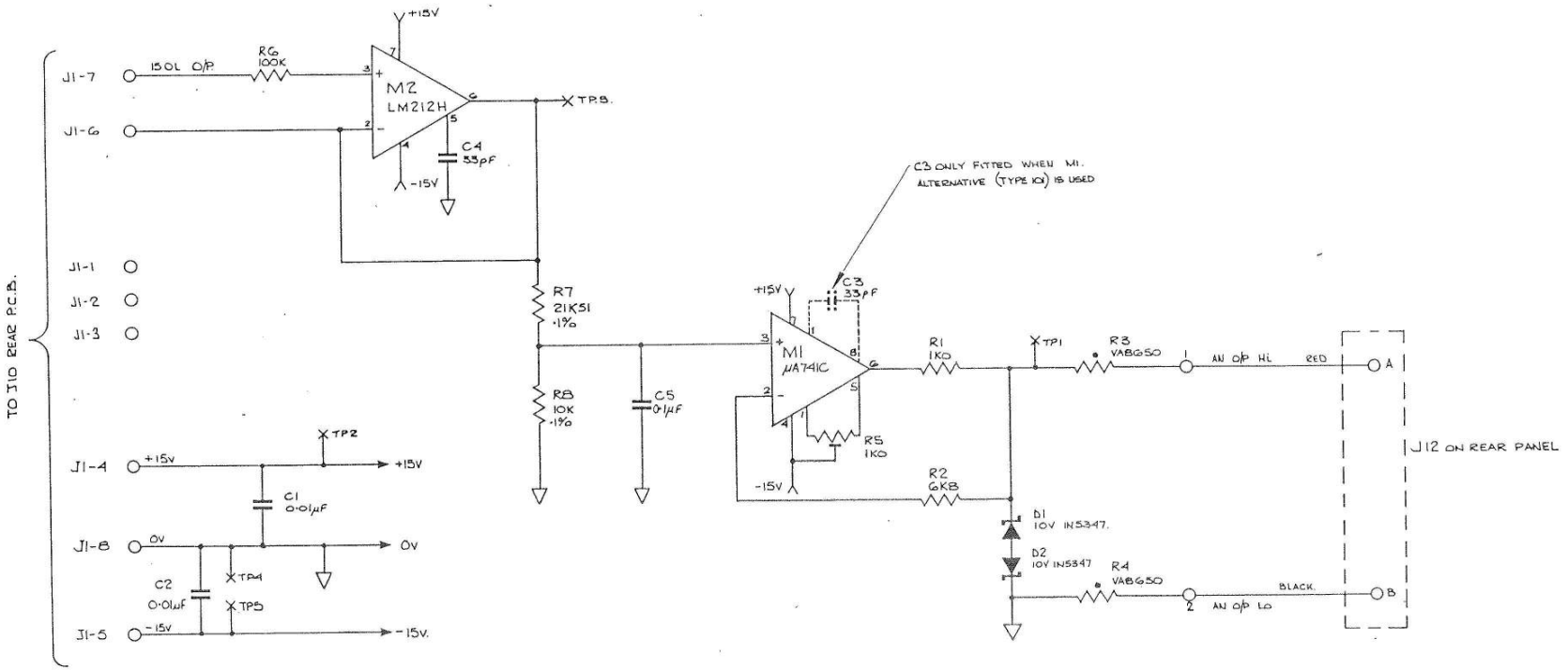

DRAWN	CHECKED	DIMENSIONS IN	TOLERANCES ANGULAR ± ½°	MATERIAL	datron ELECTRONICS LTD. NORWICH.	DRAWING SIZE
B.J.		MILLIMETRES	INCH DIMENSIONS DECIMAL TO 3 PLACES ± ·005; DECIMAL TO 2 PLACES ± ·010; FRACTIONAL ± 1/64			A2
TRACED	APPROVED	SCALE	METRIC DIMENSIONS DECIMAL TO 2 PLACES ± 1mm; DECIMAL TO 1 PLACE ± 2mm; WHOLE DIMENSIONS ± 4mm	FINISH	TITLE ANALOGUE OUTPUT CIRCUIT. 1061/1071/1081	DRAWING No. 430308
DATE 29-11-78	DATE	NOT TO BE SCALED	UNLESS OTHERWISE STATED			SHEET 1 OF 1

THIRD ANGLE PROJECTION
DRAWN IN ACCORDANCE WITH BS 308

DRAWING No 400328
FIRST USED ON 1061

ALL BURRS TO BE REMOVED

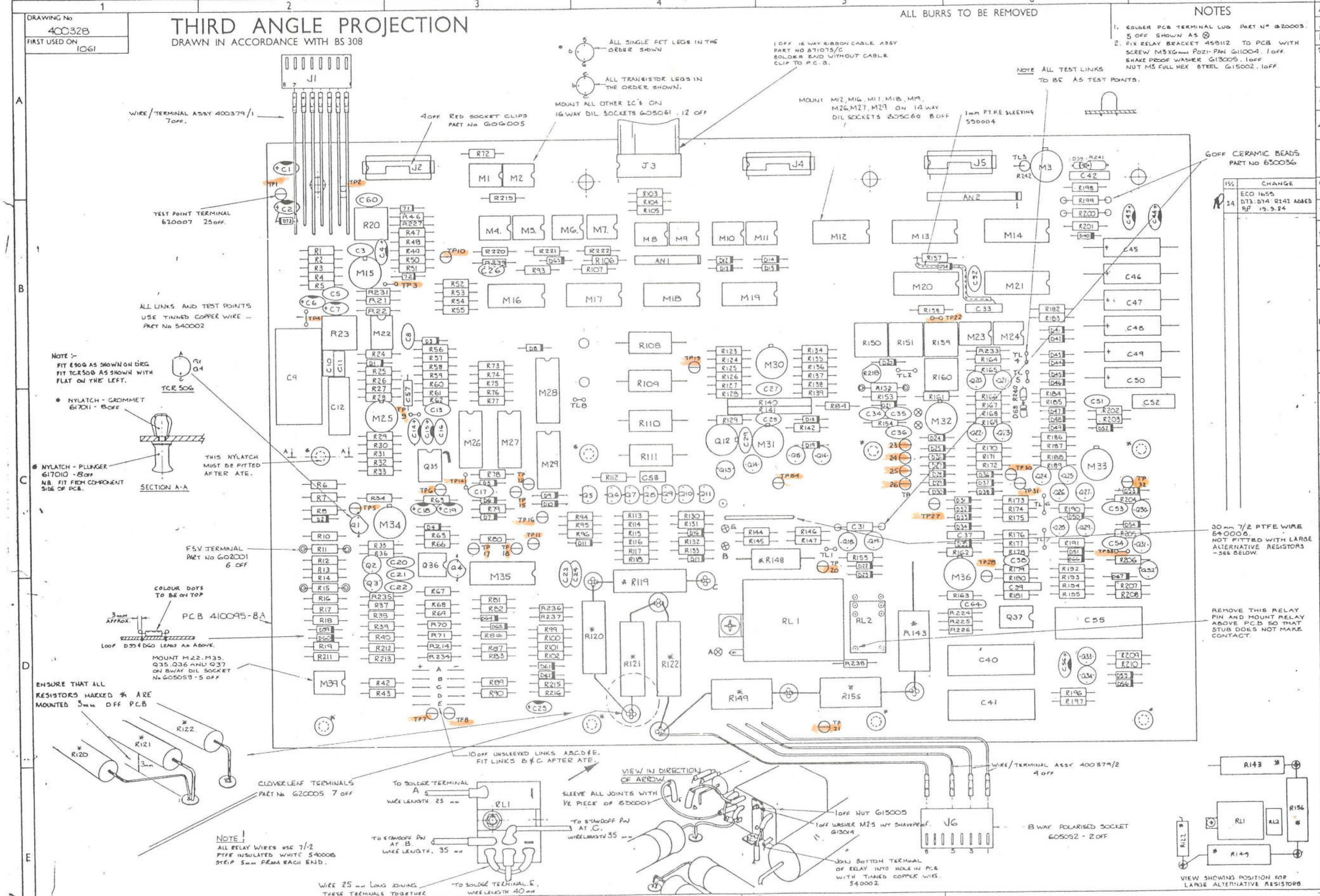

NOTES

1. SOLDER PCB TERMINAL LUG PART Nº 620003. 5 OFF SHOWN AS ⊗
2. FIX RELAY BRACKET 458112 TO PCB WITH SCREW M3x6mm POZI-PAN G11004. 1 OFF. SHAKE PROOF WASHER G13005. 1 OFF. NUT M3 FULL HEX STEEL G15002. 1 OFF.

ISS.	CHANGE
24	ECO 1655 D73: D74: R242 ADDED RP 19.3.84

ISS.	CHANGES
A	
B	UPDATED PCB.
1	RELEASED TO PROD'N 23-11-78
2	R48 WAS 10K (200008) R204 ... WAS ... (200221) ... WAS 1406 (280008) ECO 807 26.2.79 W.A.S.
3	COMPONENT VALUES CHANGED. REFER TO ECO 826 & ... 4.4.79. IL
4	COMPONENT VALUES CHANGED. REFER TO ECO 853. 23-4-79. BJ.
5	D57 REMOVED & R24 ... CHANGE TO R24. ECO 886/810/904 IL 19.6.79
6	ECO 925. D40 HAS BEEN RE-INSTATED. BJ. 16-7-79.
7	ECO 937 PCB RAISED TO ISS.8A IL 6.9.79
8	ECO. 959 C59 ADDED ACROSS M16-8 & M16-11 IL 20.9.79
9	ECO 963, 972 & 985. C30 REMOVED. CHANGED ,R182, R188, C31, C35, M36 & RL1 BJ 17-10-79
10	ECO 987, 985 & 997. RELAY WIRES WERE PVC INSULATED. R57 WAS 47R. R127 WAS 10M ... R219, 220, 221 & 222 WERE IN ... R227 & C60 ADDED BJ 30-10-79
11	ECO 1000 SOCKET CLIP 606005 WAS 606007 ... 21.1.80
12	ECO 1043 1072. 1077 PARTS LIST CHANGES IL 27.2.80
13	ECO 1098. 1107 CLOVERLEAFS WERE 18 OFF. D58 REMOVED & REPLACED BY LK3 R217, C59 & LINKS P'4'G' DELETED. PARTS LIST CHANGES IL 16.4.80
14	ECO 1050. 1117. 1128 PARTS LIST CHANGES C8 RELOCATED. D68 ADDED. R41/R88 DELETED. IL 2.6.80
15	ECO. 1168. 1144 Q35 Q36 WERE 2N3956 R12, R35, R36, Q24 Q3 ADDED. IL 24.9.80
16	ECO. 1114 1182. 1184. 1188 1190. 1191. 1191. 1192 Q35 & Q36 NOW MOUNT ON DIL SOCKET ... R236 & R237 ADDED. WIRE TERMINAL ... TO J1-7 WAS FITTED TO J1-8. TRACK FROM WHERE J1-7 WIRE JOINS PCB CUT ON COMP. SIDE. LK21 ADDED. FURTHER PARTS LIST CHANGES. IL 18.12.80
17	ECO 1217 J3 WAS 16 WAY SOCKET. IL 16.2.81
18	ECO 1244 1248 PARTS LIST CHANGES IL 2.11.81
19	ECO 1245, 1273 M7 WAS 220023 ... 5.1.82 ...
20	ECO 1282. PCB WAS ISS 8A. RL2 WAS 330018. M36 WAS 2.2. C36 WAS 47 PF. R23 WAS 2.M. R26 WAS ... R27 WAS ... M22 WAS CAN TYPE R233, 234, 235, 238, 239, 224, 225, 226, 231, D71, D72, C64 Q37 AND 1 HARWIN PIN ADDED. 3 CLOVERLEAVES DELETED. JM 22.7.82.
21	ECO 1460 R240 ADDED IL 25.5.83
22	ECO 1512 R241 ADDED JM 17.8.83
23	ECO 1645, 1643. ...

DRAWN	CHECKED	DIMENSIONS IN	TOLERANCES	MATERIAL
BJ		MILLIMETRES	INCH DIMENSIONS DECIMAL TO 2 PLACES ± .005 DECIMAL TO 3 PLACES ± .010 FRACTIONAL ± 1/64 METRIC DIMENSIONS DECIMAL TO 1 PLACES ± 1mm DECIMAL TO 2 PLACES ± 2mm WHOLE DIMENSIONS ± 4mm UNLESS OTHERWISE STATED ANGULAR ±	
TRACED	APPROVED	SCALE 2:1 NOT TO BE SCALED		FINISH
DATE 12-7-78	DATE			

datron ELECTRONICS LTD. NORWICH.

TITLE 1061 ANALOGUE PCB ASSEMBLY

DRAWING No. 400328 | DRAWING SIZE A1 | SHEET 1 OF 24

DRAWING No	430328
FIRST USED ON	1061

THIRD ANGLE PROJECTION

DRAWN IN ACCORDANCE WITH BS 308

ALL BURRS TO BE REMOVED

NOTES

= SIGNAL COMMONS

= ANALOGUE COMMON

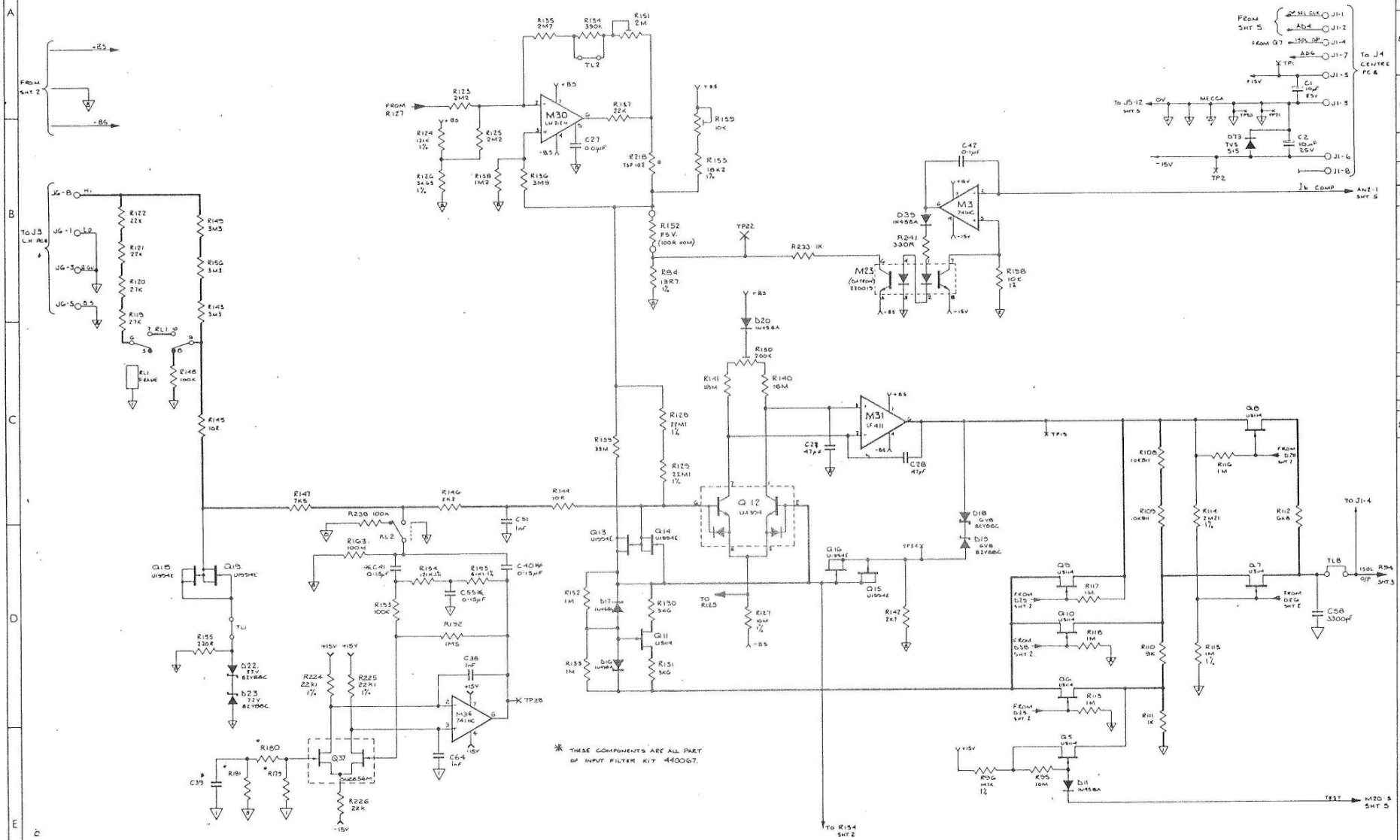

ISS.	CHANGES
3	RE DRAWN 19-4-79 ECO 876, 884 & 893 BJ AD
4	SEE SHEETS 2+3 AD
5	SEE SHEET 5 AD
6	ECO 938 SEE SHT. 3 IC 10 8.79 AD
7	ECO 995 MSG WAS A4714. ECO 986 C30 DELETED BJ 12-10-79 AG
8	ECO 1065 R97, R217 WAS 10 POSITIONS (SHT 1) R220, 221 & 227 WERE 1M (SHT 4) R215 WAS 1M R57 - NTE SG0 ADDED (SHT 3) R227 " 20-10-79 MF
9	ECO 1049. R123 WAS 2M37 1% R125 WAS 2M37 1% R134 WAS 470K R135 WAS 3M92 1% R136 WAS 4M75 1% R138 WAS 1M82 1% IC 27.2.80 MF
10	ECO 1098 R217 & LINK 'G' DELETED IC 4.80 MF
11	ECO. 1050. 1117, 1124 SEE SHTS. 2, 3 & 4 IC 2.6.80 AD
12	ECO 1169 SEE SHEET 3 IC 23.9.80 AD
13	ECO. 1184. 1188. 1191. 1190. 1192 J1-8 WAS GU. J1-7 ADDED (ADJ). R150 WAS 100K SEE ALSO SHTS 2+5 IC 16.12.80 MO
14	ECO 1248 SEE SHEETS 3 & 4 IC 3.11.81 AD
15	ECO 1273 R127 WAS A CR68 IC 7-1-82 AD
16	ECO 1282. R224, R225, R226 R233, R238, C64 AND Q37 ADDED. M36 WAS 212. TLB WAS TP13. IJA 23.7.82 AD
17	ECO 1460 R240 ADDED, SHT2 IC 25.5.83 AD
18	ECO 1512 R241 ADDED. IJA 17.8.83 AD
19	SEE SHEET 2. AD
20	ECO 1659 D73 ADDED RF 15.9.84 AD

DRAWN	CHECKED
BJ	
TRACED	APPROVED
DATE 5-4-79	DATE

DIMENSIONS IN MILLIMETRES

SCALE NOT TO BE SCALED

TOLERANCES UNLESS OTHERWISE STATED
- ANGULAR ± 1°
- WITH DIMENSIONS: DECIMAL TO 1 PLACES ± .005; DECIMAL TO 2 PLACES ± .010; FRACTIONAL ± 1/64
- METRIC DIMENSIONS: DECIMAL TO 2 PLACES ± 1mm; DECIMAL TO 1 PLACE ± 1mm; WHOLE DIMENSIONS ± 1mm

MATERIAL ——

FINISH ——

datron ELECTRONICS LTD. NORWICH.

TITLE D.C. ISOLATOR 1061

DRAWING SIZE A1

DRAWING No 430328

SHEET 1 OF 5

DRAWING No. 430328

FIRST USED ON 1061

THIRD ANGLE PROJECTION

DRAWN IN ACCORDANCE WITH BS 308

ALL BURRS TO BE REMOVED

NOTES

RANGE	FET CONTROL LINE TP 23	TP 24	TP 25	TP 26	TP 27
100mV	1	0	1	0	0
1V	0	0	1	0	1
10V	0	1	0	1	0
100V	0	0	1	0	1
1000V	0	1	0	1	0
DC	0	0	0	1	0

LOGIC '1' = FET ON
" '0' = FET OFF

RANGE	INPUT CONTROL LINE LD7	LD6	LD5	LD4
100mV	X	1	1	0
1V	X	1	1	1
10V	X	1	0	1
100V	X	0	1	1
1000V	X	0	0	1
DC	1	0	0	0
FILTER	1	X	X	X

LOGIC '1' = 0V
" '0' = -16V

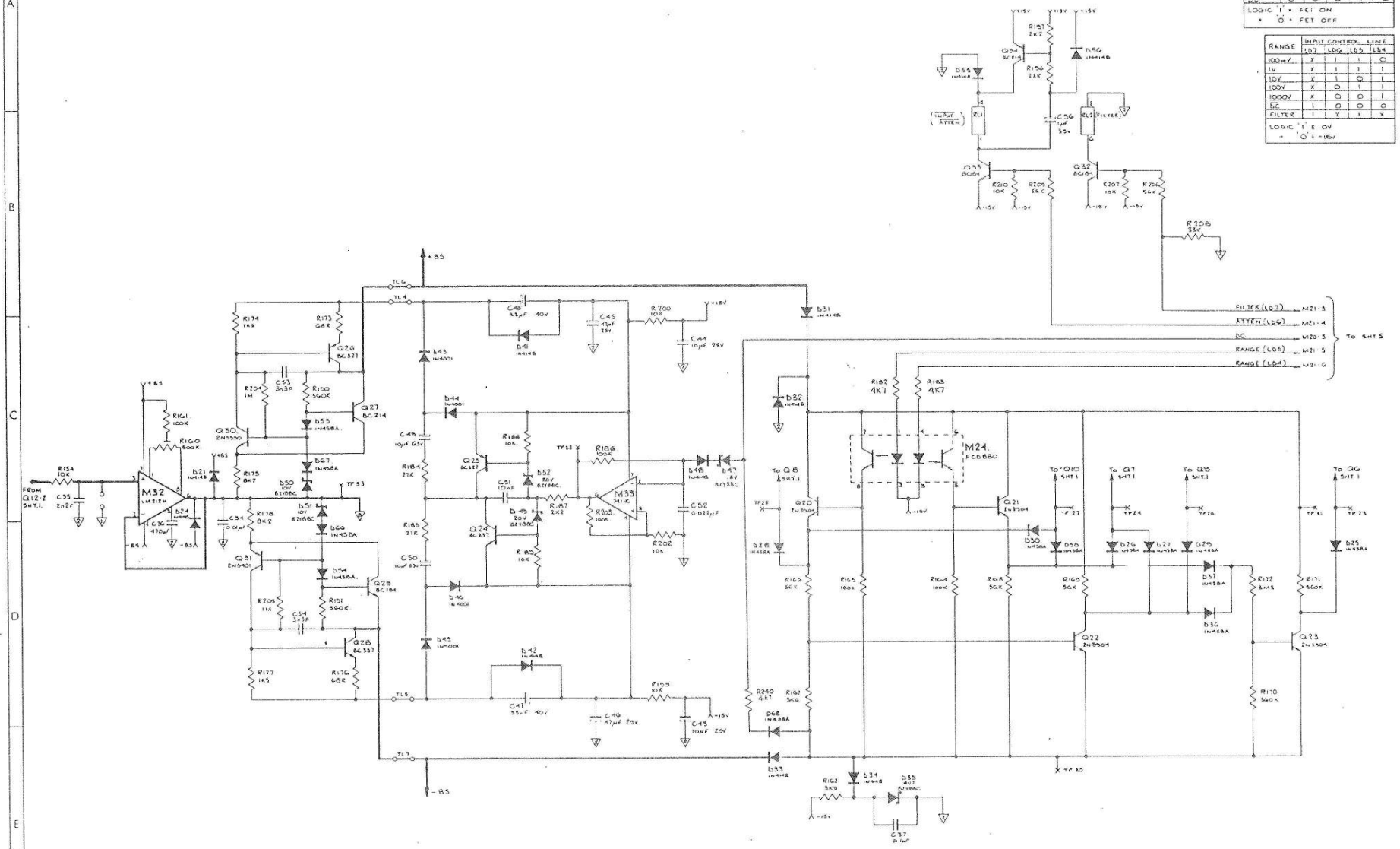

ISS	CHANGES
3	RE-DRAWN 15-4-75 ECO 826, 834 & BJ ECO 853
4	D57 DELETED IL ECO 886 20.6.78
5	SEE SHEET 5
6	SEE SHEET 3
7	ECO 963. R182 & 183 WERE 10K. BJ 12-10-79.
8	ECO 985 & 997. BJ SEE SHEET 1. 30-10-79
9	ECO 1072 C51 WAS 2n2F C53 C54 WERE 10nF IL 27.2.80
10	SEE SHEETS 1,3 & 5 IL 16.4.80
11	ECO 1117 D68 ADDED. IL 2.6.80
12	SEE SHEET 3
13	SEE SHEETS 1,3 & 4
14	SEE SHEETS 3 & 4
15	ECO 1273 SEE SHEET 1 JK 7.1.82
16	ECO 1282
17	ECO 1460 R240 ADDED IL 25.5.83
18	SEE SHEET 1
19	ECO 1645. Q30 WAS 2N5904 Q31 WAS 2N5906 BJ 14th JUNE 84
20	SEE SHTS 1 & 5

DRAWN	CHECKED	DIMENSIONS IN MILLIMETRES	TOLERANCES ANGULAR ± ° INCH DIMENSIONS DECIMAL TO 3 PLACES ± .005 DECIMAL TO 2 PLACES ± .010 FRACTIONAL ± 1/64 METRIC DIMENSIONS DECIMAL TO 2 PLACES ± 1mm DECIMAL TO 1 PLACE ± 2mm WHOLE DIMENSIONS ± 4mm UNLESS OTHERWISE STATED	MATERIAL	DRAWING SIZE A1
B.J.					
TRACED	APPROVED	SCALE		FINISH	
DATE 15-4-75	DATE	NOT TO BE SCALED			

datron ELECTRONICS LTD. NORWICH.

TITLE: BOOT STRAPPED SUPPLIES & RANGE LOGIC 1061

DRAWING No. 430328

SHEET 2 OF 5

DRAWING No 430328

FIRST USED ON 1061

THIRD ANGLE PROJECTION

DRAWN IN ACCORDANCE WITH BS 308

ALL BURRS TO BE REMOVED

NOTES

ISS.	CHANGES
3	RE DRAWN 15-4-79 ECO 826, 834 & 8J ECO 855
4	R24 WAS 820K ECO 910 20.6.79
5	SEE SHEET 5
6	SEE SHEET 5
7	SEE SHEET 1 & 2
8	ECO 989 & 997. BJ SEE SHT. 1. 30-10-79
9	SEE SHEETS 1 & 2
10	ECO 1098 Q35 Q36 WERE SU2656M. R46 WAS 1K5. D58 DELETED & REPLACED WITH LK3 16.4.80
11	ECO 1050. R58 WAS 1K. C8 WAS ACROSS R24. C11 WAS 1nF. C57 WAS 68pF. M22 WAS LF356H. 2.6.80
12	Q35 & Q36 WERE 2N3856 R4 WAS 10M R5 WAS 18K R12 & R14 WERE 5K6 R13 & R35 WERE ADDED R36 R24 WAS 680K C12 WAS 0.47µF Q2 & Q3 ADDED. LK1 & LK2 REMOVED 25.9.80
13	R236 & R237 ADDED R57 WAS 200R 16.12.80
14	M1 NOW SELECTED SEE ALSO SHT. 4 3.11.81
15	ECO 1273 SEE SHEET 1 7.1.82
16	ECO 1282 R231, D71, D72 ADDED. R26 WAS 2M2 R27 WAS 820K JR 23.7.82.
17	SEE SHEET 2
18	SEE SHEET 1
19	SEE SHEET 2
20	SEE SHTS 1 & 5

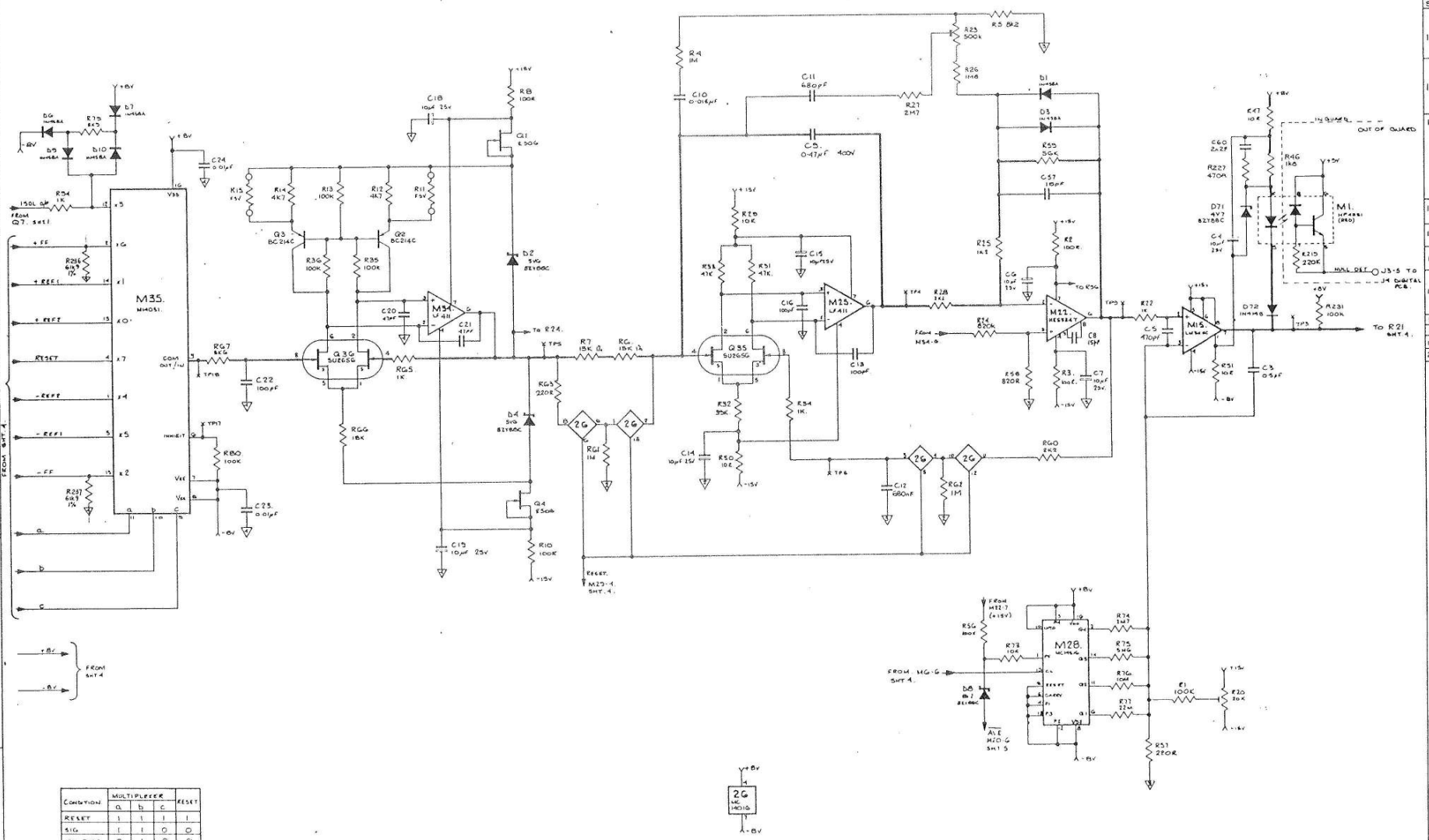

CONDITION	MULTIPLEXER a	b	c	RESET
RESET	1	1	1	1
SIG	1	1	0	0
-Ve BIAS	0	1	0	0
+Ve REF 1	1	0	0	0
+Ve REF 2	0	0	0	0
+Ve BIAS	0	1	1	0
-Ve REF 1	1	0	1	0
-Ve REF 2	0	0	1	0

DRAWN	CHECKED	DIMENSIONS IN	TOLERANCES	MATERIAL	datron ELECTRONICS LTD. NORWICH.	DRAWING SIZE
B J		MILLIMETRES	INCH DIMENSIONS: DECIMAL TO 2 PLACES ± .005; DECIMAL TO 3 PLACES ± .010; FRACTIONAL ± 1/64			A1
TRACED	APPROVED	SCALE	METRIC DIMENSIONS: DECIMAL TO 2 PLACES ± 1mm; DECIMAL TO 1 PLACE ± 2mm; WHOLE DIMENSIONS ± 4mm	FINISH	TITLE A-D CONVERTOR · 1061	DRAWING No. 430328
DATE 11-4-79	DATE	NOT TO BE SCALED	UNLESS OTHERWISE STATED			SHEET 3 OF 5

DRAWING No. 430328

FIRST USED ON 1061

THIRD ANGLE PROJECTION

DRAWN IN ACCORDANCE WITH BS 308

ALL BURRS TO BE REMOVED

NOTES

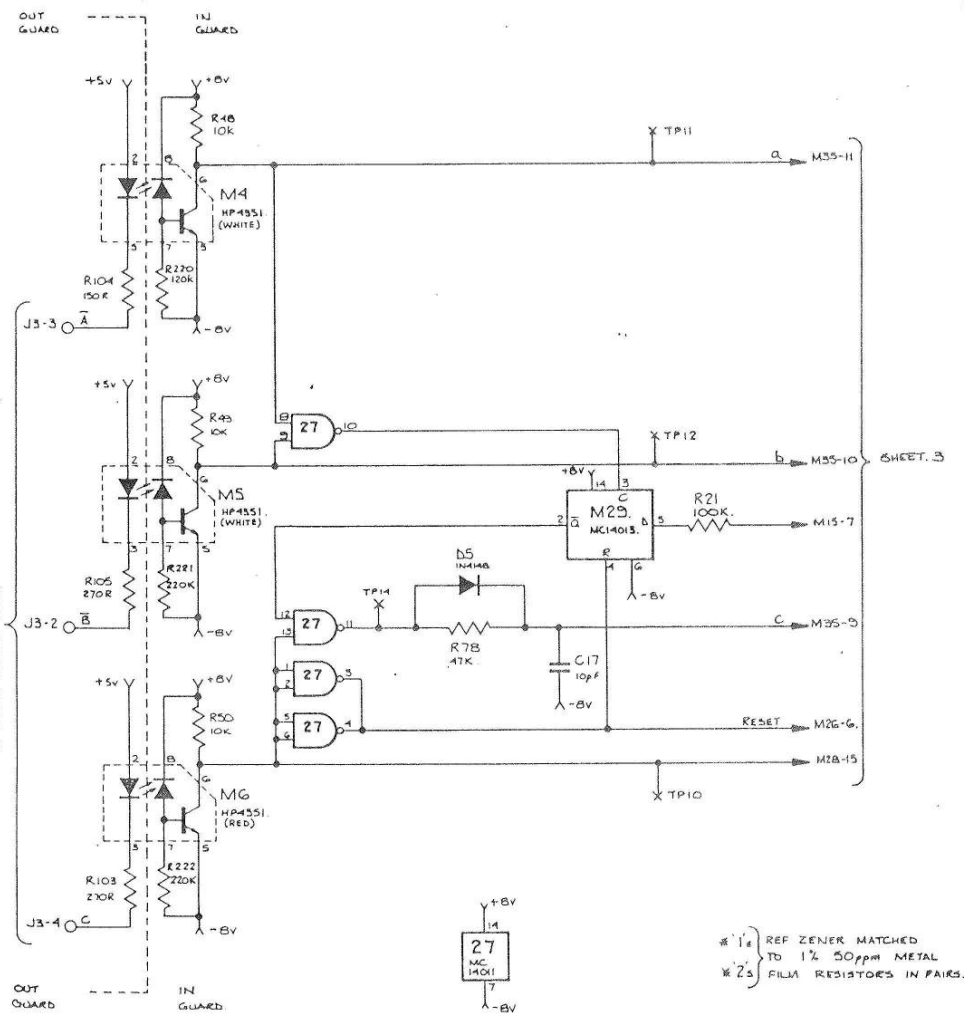

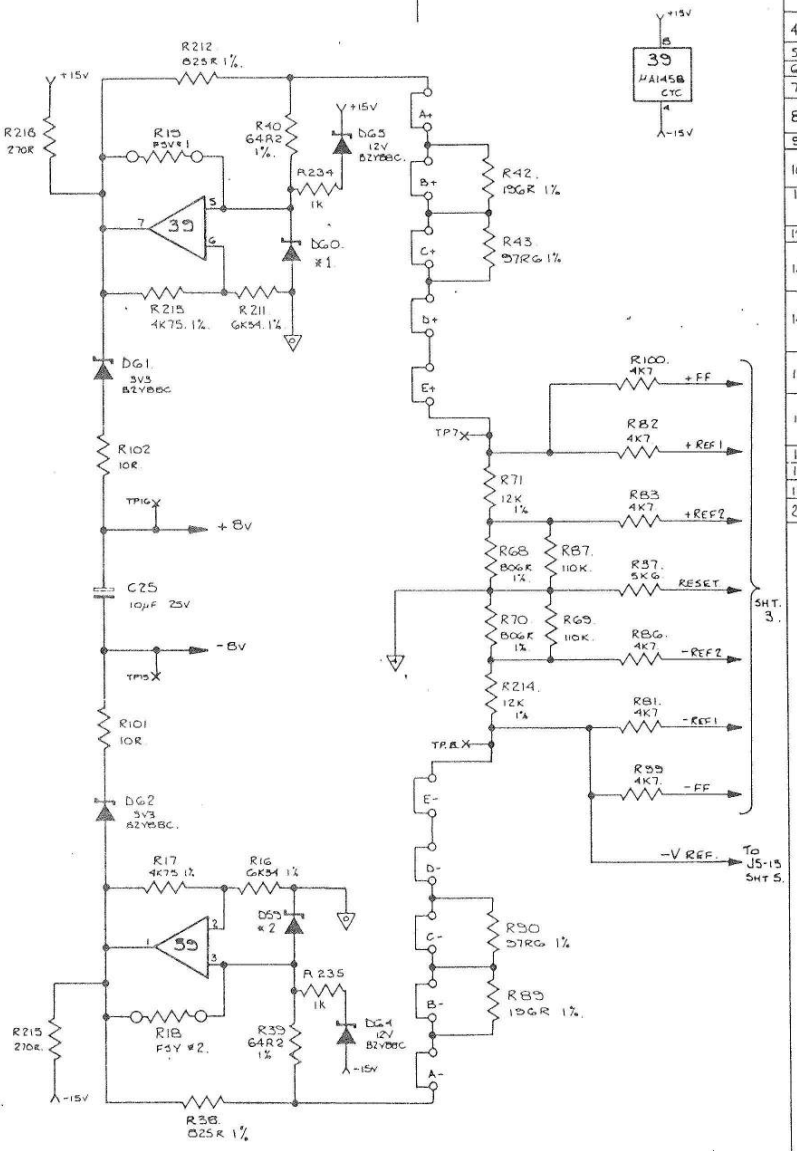

* 1's REF ZENER MATCHED TO 1% 50ppm METAL
* 2's FILM RESISTORS IN PAIRS.

ISS	CHANGES
3	RE-DRAWN B.J. 19-4-79. ECO 826 & 834 & ECO 853
4	SEE SHEETS 2 & 3.
5	SEE SHEET 5.
6	SEE SHEET 5.
7	SEE SHEET 1 & 2
8	ECO 885 & 887. SEE SHT 1. B.J. 30-10-79
9	SEE SHEETS 1 & 2.
10	SEE SHEETS 1 3 & 5 IL 16.4.80
11	ECO 1128. R41 + R88 DELETED IL 9.6.80
12	SEE SHEET 3.
13	R48 WAS 5K6 R105 WAS 150R R220 WAS 220K IL 16.12.80
14	R39 & R40 WERE 40R2. M4-M6 SELECTED. SEE ALSO SHT. 3 IL 3.11.81
15	ECO 1273 SEE SHEET 1 JR 7·1·82
16	ECO 1282 R234, R235 ADDED JR 23·7·82
17	SEE SHEET 2
18	SEE SHEET 1
19	SEE SHEET 2
20	SEE SHTS 1&5

DRAWN B.J.	CHECKED	DIMENSIONS IN MILLIMETRES	TOLERANCES ANGULAR ± ½° INCH DIMENSIONS DECIMAL TO 3 PLACES ± .005; DECIMAL TO 2 PLACES ± .010; FRACTIONAL ± 1/64. METRIC DIMENSIONS DECIMAL TO 2 PLACES ± 1mm; DECIMAL TO 1 PLACE ± 2mm; WHOLE DIMENSIONS ± 4mm. UNLESS OTHERWISE STATED	MATERIAL	datron ELECTRONICS LTD. NORWICH.
TRACED	APPROVED	SCALE NOT TO BE SCALED		FINISH	TITLE A-D CONTROL & REFERENCES. 1061
DATE 6-4-79	DATE				DRAWING No. 430328

DRAWING SIZE A2

SHEET 4 OF 5

DRAWING No.	430328
FIRST USED ON	1061

THIRD ANGLE PROJECTION

DRAWN IN ACCORDANCE WITH BS 308

ALL BURRS TO BE REMOVED

NOTES

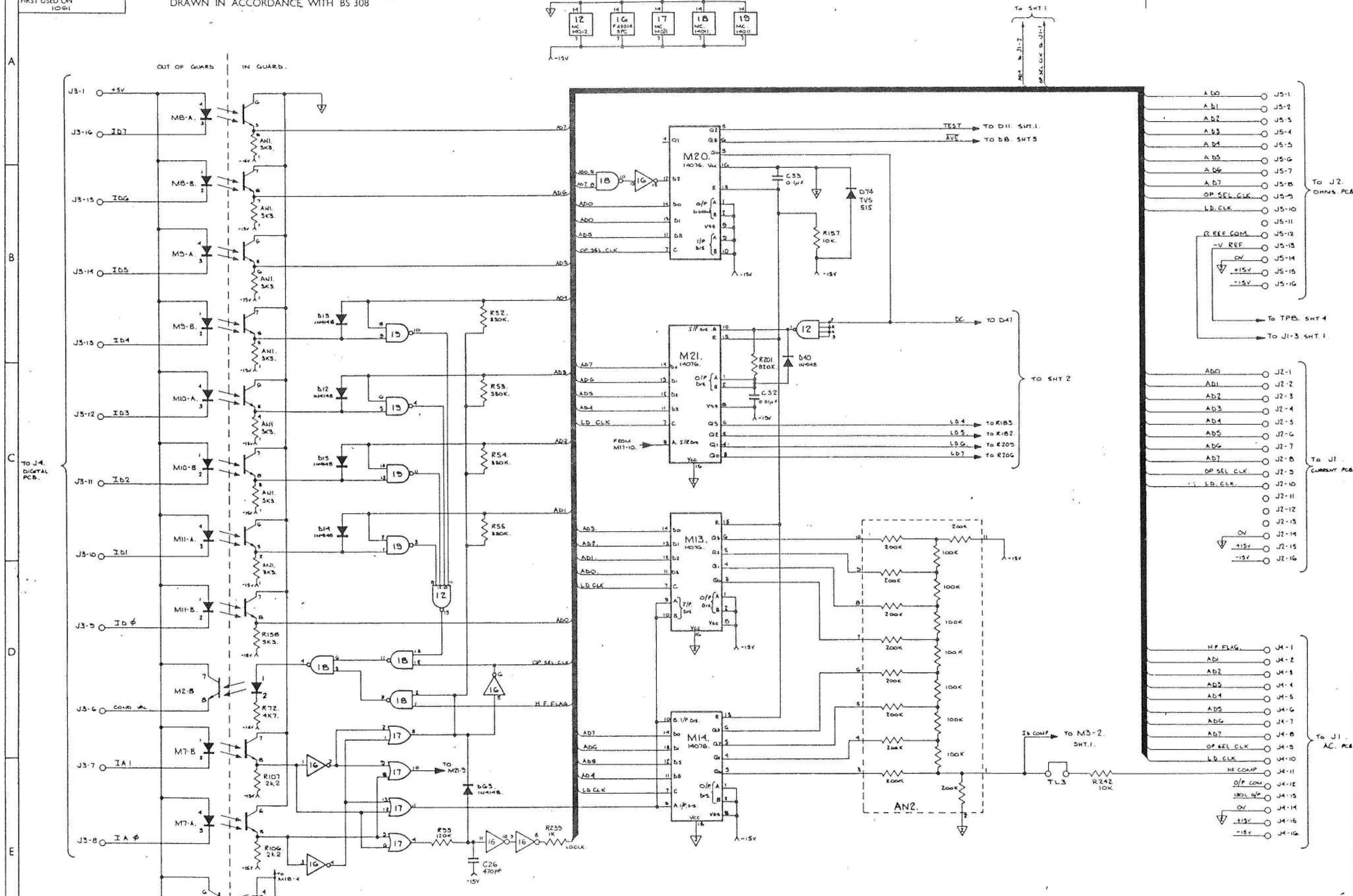

ISS.	CHANGES
3	RE-DRAWN 19-4-79 ECO 826, 854 & BJ ECO 858
4	SEE SHEETS 2+3
5	ECO 929. D40 HAS BEEN RE-INSTATED BJ 16-7-79
6	ECO 959 C33 ADDED AC9038 M16-8 & M16-6 JL 20.9.79
7	SEE SHEET 1 & 2.
8	ECO 985 & 997. BJ SEE SHEET 1. 10-10-79
9	SEE SHEETS 1 & 2
10	ECO 1098, 1107 LINK 'F' DELETED M16 WAS 14069 C59 DELETED C26 WAS 1nF R83 WAS 100k R106/R107 WERE 3K3 JL 17.4.80
11	SEE SHEETS 2+3
12	SEE SHEET 3
13	SEE SHEETS 1,3+4
14	SEE SHEETS 3+4
15	ECO 1273 SEE SHEET 1 JR 7.1.82
16	ECO 1282 R239 ADDED. JR 23.7.82
17	SEE SHEET 2
18	SEE SHEET 1
19	SEE SHEET 2
20	ECO 1459 B74: R242 ADDED RP 19.9.84

DRAWN	CHECKED	DIMENSIONS IN	TOLERANCES	MATERIAL
B J		MILLIMETRES	INCH DIMENSIONS DECIMAL TO 1 PLACES ± .005; DECIMAL TO 2 PLACES ± .010; FRACTIONAL ± 1/64; METRIC DIMENSIONS DECIMAL TO 2 PLACES ± 1mm; DECIMAL TO 1 PLACE ± 2mm; WHOLE DIMENSIONS ± 4mm; UNLESS OTHERWISE STATED; ANGULAR ±	FINISH
TRACED	APPROVED	SCALE		
DATE 18-4-75	DATE	NOT TO BE SCALED		

datron ELECTRONICS LTD. NORWICH.

TITLE: ANALOGUE INTERFACE LOGIC 1061

DRAWING SIZE: A1

DRAWING No. 430328 — SHEET 5 OF 5

THIRD ANGLE PROJECTION

DRAWN IN ACCORDANCE WITH BS 308

DRAWING No. 400329
FIRST USED ON 1061

ALL BURRS TO BE REMOVED

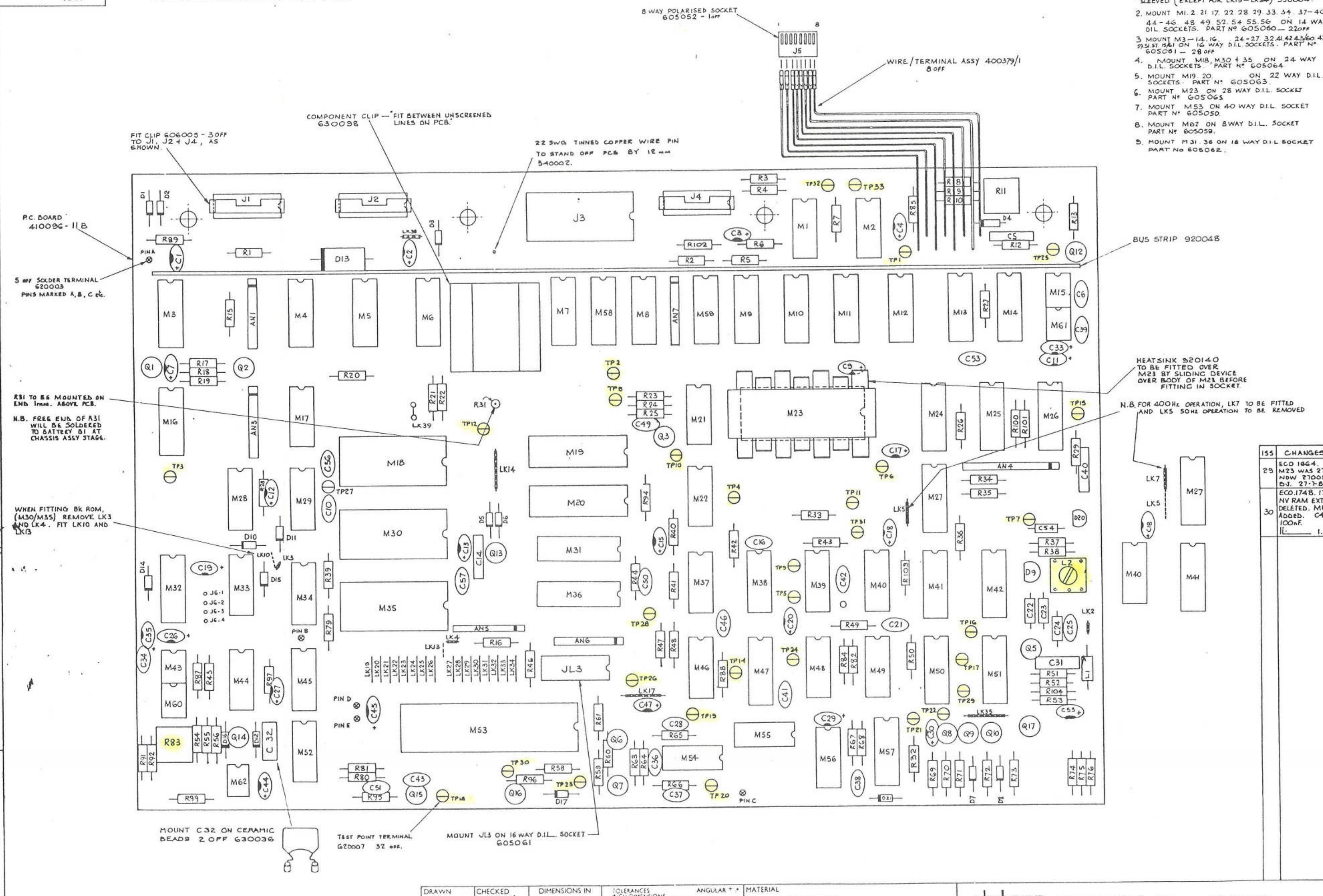

NOTES

1. LINKS (LK) MADE FROM 22SWG BTC WIRE (540002) AND SLEEVED (EXCEPT FOR LK19 — LK34) 590004.
2. MOUNT M1. 2. 21. 17. 22. 28. 29. 33. 34. 37—40, 44—46. 48. 49. 52. 54. 55. 56 ON 14 WAY DIL SOCKETS. PART Nº 605060 — 22 OFF
3. MOUNT M3—14. 16. 24—27. 32. 41. 42. 43/60. 47. 50. 58. 59. 51. 57. 15/61 ON 16 WAY D.I.L. SOCKETS. PART Nº 605061 — 28 OFF
4. MOUNT M18, M30 & 35 ON 24 WAY D.I.L. SOCKETS. PART Nº 605064
5. MOUNT M19. 20. ON 22 WAY D.I.L. SOCKETS. PART Nº 605063.
6. MOUNT M23 ON 28 WAY D.I.L. SOCKET PART Nº 605065
7. MOUNT M53 ON 40 WAY D.I.L. SOCKET PART Nº 605050.
8. MOUNT M62 ON 8WAY D.I.L. SOCKET PART Nº 605059.
9. MOUNT M31. 36 ON 18 WAY D.I.L SOCKET PART No 605062.

ISS.	CHANGES
A	
1	RELEASED TO PRODN 24.11.78
2	ECO 811 4.1.79 ISS 4 PCB UPDATE IL.
3	ECO 815 C48 100nF (10101) ADDED C23 WAS 1000nF (300G0) C24 WAS 100nF (300G1) C25 WAS 47nF (300G2) 29 JAN 79 W.G.S
4	ECO. 835/852 ISS.5 PCB UPDATE - SEE ECOs FOR FULL DETAILS. IL. 17.4.79
5	ECOs. 863/872/904/905/911/912 PARTS LIST CHANGES IL. 19.6.79
6	ECO. 928 C53 ADDED. PTs. LT. CHANGE To R85 IL. 17.7.79
7	ECO. 941/949 PTs. LT. CHANGE TO R2 IL. 4.9.79
8	ECO. 939. 961. 989. 1004 PTs. LT. CHANGE IL. 29.10.79
9	ECOs 998.1000.1032.1045.1047 ISS.6 PCB. UPDATE SEE ECO's FOR FULL DETAILS IL. 4.1.80
10	ECO. 1057 PARTS LIST CHANGE ONLY IL. 21.1.80
11	ECO 1067 WIRE TERMINAL ASSY 400379/1 ADDED W.G.S 13-FEB 80
12	ECO. 1046. 1086. 1091. 1092 PCB UPDATED ISS. 7A. PARTS LIST CHANGES. IL. 20.3.80
13	ECO. 1108 R103 ADDED. PARTS LIST CHANGES IL. 18.4.80
14	ECO. 1135 R104 ADDED. + PARTS LIST CHANGES IL. 18.6.80
15	ECO. 1137. 1140. 1142 PARTS LIST CHANGES C32 CONNECTED TO R55 R56. '+' SIGN ADDED TO TANT. CAPS. IL. 28.7.80
16	ECO. 1147 D21 ADDED IL. 30.9.80
17	ECO. 1188 R28 WAS 1k - PARTS LIST CHANGE IL. 6.1.81
18	ECO 1214 PCB UPDATED TO 8B PARTS LIST CHANGES LK 39 ADDED JR 11-6-81
19	ECO. 1241 Nº OF 24 WAY SOCKETS WAS 2. IL. 4.11.81
20	ECO 1281, 1233 & 1243 R36 WAS 100K. R46 WAS 330K. M21, 36 WERE 22 PIN 256 x 4 BIT RAM. PCB WAS ISS 8B. LK38 ADDED. J3 WAS 605064 JR 2.12.81
21	ECO. 1369 M18 NOW USED — SEE PARTS LIST M30. M35 WERE ISS. 9 IL. 9.9.82
22	ECO 1431 C32 NOW MOUNTED ON CERAMIC BEADS JR 16.12.82.
23	ECO. 1461 EARTH WIRE ADDED. LINK (DIG. COM. LOW IMPEDANCE) BETWEEN BUS STRIP & C36 ADDED IL. 31.5.83
24	ECO 1519 M18. M30 & M35 WERE ISS 17A. JR 18.8.83.
25	ECO. 1559 HEATSINK 920140 ADDED TO M23 IL. 11.11.83
26	ECO 1542 & 1588 C56 & 57 ADDED. EARTH WIRE REMOVED PCB UPDATE SOFTWARE UPDATE NYLATCH REMOVED BJ. 27-2-84.
27	ECO 1605 M18 M30 & M35 WERE ISS. 18 IL. 6.4.84
28	ECO 1633. 1637 PCB WAS ISS 11A M20 DELETED M19 WAS 8101 RAM. [illegible]
29	ECO 1664. M23 WAS 270053 NOW 270053-3 BJ. 27-7-84.
30	ECO. 1748. 1750 NV RAM EXTN PCB DELETED. M19, M20 ADDED. C40 WAS 100nF. IL. 1.11.84

DRAWN	CHECKED	DIMENSIONS IN	TOLERANCES	MATERIAL
IL.	P.R.H.	MILLIMETRES	INCH DIMENSIONS: DECIMAL TO 3 PLACES ± .005; DECIMAL TO 2 PLACES ± .010; FRACTIONAL ± 1/64. METRIC DIMENSIONS: DECIMAL TO 2 PLACES ± 1mm; DECIMAL TO 1 PLACE ± 2mm; WHOLE DIMENSIONS ± 4mm. UNLESS OTHERWISE STATED. ANGULAR ± °	
TRACED	APPROVED	SCALE 2:1		FINISH
DATE 26.6.78	DATE	NOT TO BE SCALED		

datron ELECTRONICS LTD. NORWICH.

TITLE: 1061 DIGITAL PCB. ASSY

DRAWING SIZE: A1

DRAWING No. 400329

SHEET 1 OF 15

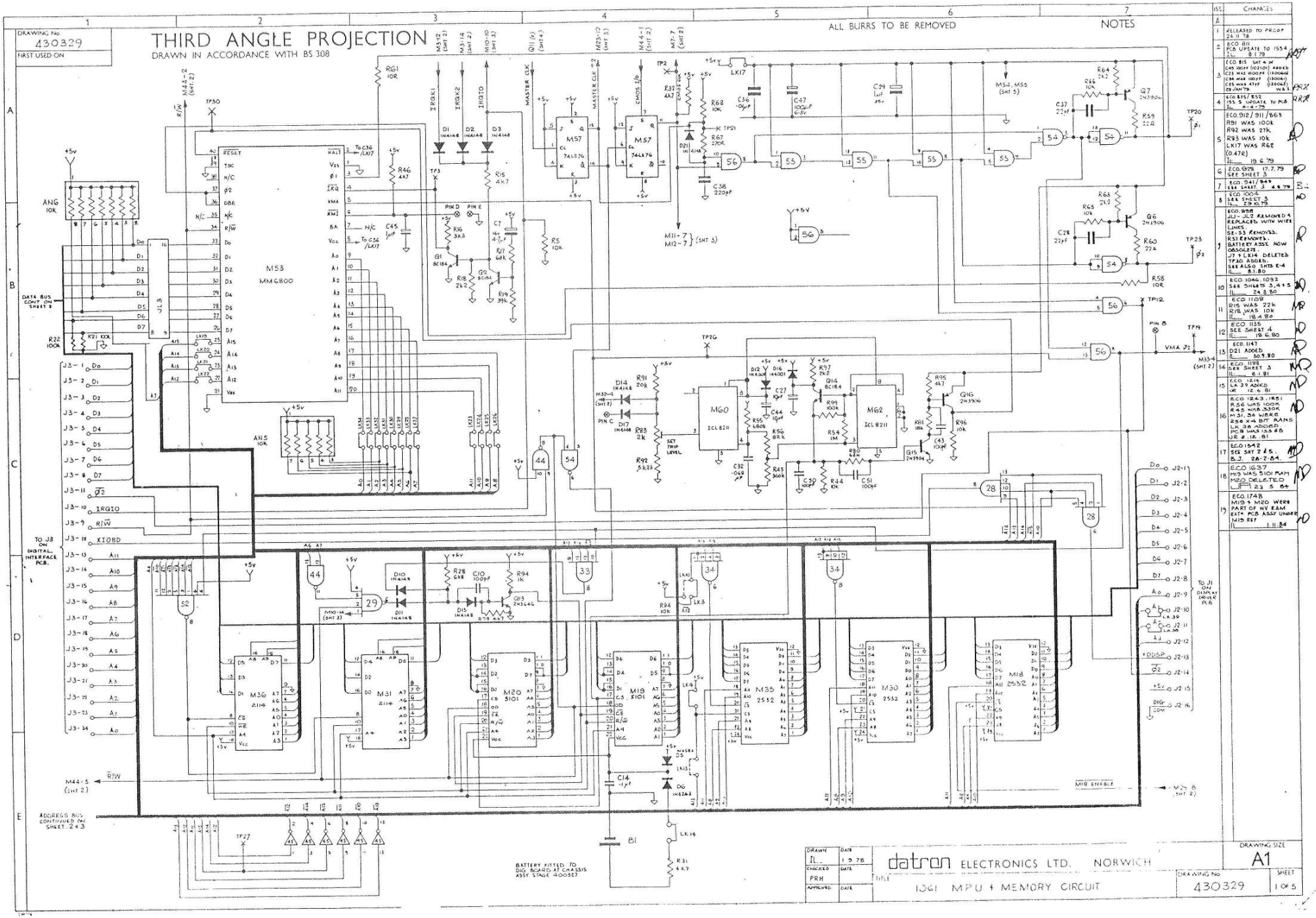
DRAWING No
430329
FIRST USED ON
THIRD ANGLE PROJECTION
DRAWN IN ACCORDANCE WITH BS 308
ALL BURRS TO BE REMOVED
NOTES
ISS CHANGES
A
1 RELEASED TO PROD 24.11.78
2 ECO 811 PCB UPDATE TO 1554 IL 8.1.79
3 ECO 815 SHT 4 OF C45 100PF (102101) ADDED C23 WAS 100PF (330048) C34 WAS 100PF (330048) C25 WAS 47PF (330047) 29 JAN 79 WAS
4 ECO 835/852 155 S UPDATE TO PCB 4-4-79
5 ECO 912/911/863 R91 WAS 100K R92 WAS 27K R93 WAS 10K LK17 WAS R62 (0.47Ω) IL 18.6.79
6 ECO 929 17.7.79 SEE SHEET 3
7 ECO 941/849 SEE SHEET 3 4.9.79
8 ECO 1004 SEE SHEET 3 IL 29.10.79
9 ECO 1058 JU1-JU2 REMOVED & REPLACED WITH WIRE LINKS. SI-S3 REMOVED. RST REMOVED. BATTERY ASSY NOW OBSOLETE. J7 & LK14 DELETED TP30 ADDED. SEE ALSO SHTS E-4 IL 8.1.80
10 ECO 1046, 1092 SEE SHEETS 3, 4 & 5 IL 24.3.80
11 ECO 1108 R15 WAS 22K R18 WAS 10K IL 18.4.80
12 ECO 1135 SEE SHEET 4 IL 19.6.80
13 ECO 1147 D21 ADDED IL 30.9.80
14 ECO 1198 SEE SHEET 3 IL 6.1.81
15 ECO 1219 LK 39 ADDED JR 12.6.81
16 ECO 1243, 1851 R56 WAS 100K R45 WAS 330K M31, 36 WERE 2114 4 BIT RAMS LK 38 ADDED PCB WAS 1554-B JR 8.12.81
17 ECO 1542 SEE SHT 2 & 5. R.J. 28.2.84
18 ECO 1637 M19 WAS 5101 RAM M20 DELETED IL 23.5.84
19 ECO 1748 M19 & M20 WERE PART OF NV RAM WITH PCB ASSY UNDER M19 REF IL 1.11.84
M53 MM6800
M57 74LS76
M60 ICL8211
M62 ICL8211
M36 2114
M31 2114
M20 5101
M19 5101
M35 2532
M30 2552
M18 2532
ANG 10K
AN5 10K
DATA BUS CONT ON SHEET 8
TO J3 ON DIGITAL INTERFACE PCB.
TO J1 ON DISPLAY DRIVER PCB
ADDRESS BUS CONTINUED ON SHEET 2 & 3
BATTERY FITTED TO DIG BOARD AT CHASSIS ASSY STAGE 400327
DRAWN IL 1.9.78
CHECKED PRH
APPROVED
datron ELECTRONICS LTD. NORWICH
TITLE 1061 MPU & MEMORY CIRCUIT
DRAWING SIZE A1
DRAWING NO 430329
SHEET 1 OF 5

DRAWING No. 430329

FIRST USED ON

THIRD ANGLE PROJECTION

DRAWN IN ACCORDANCE WITH BS 308

ALL BURRS TO BE REMOVED

NOTES

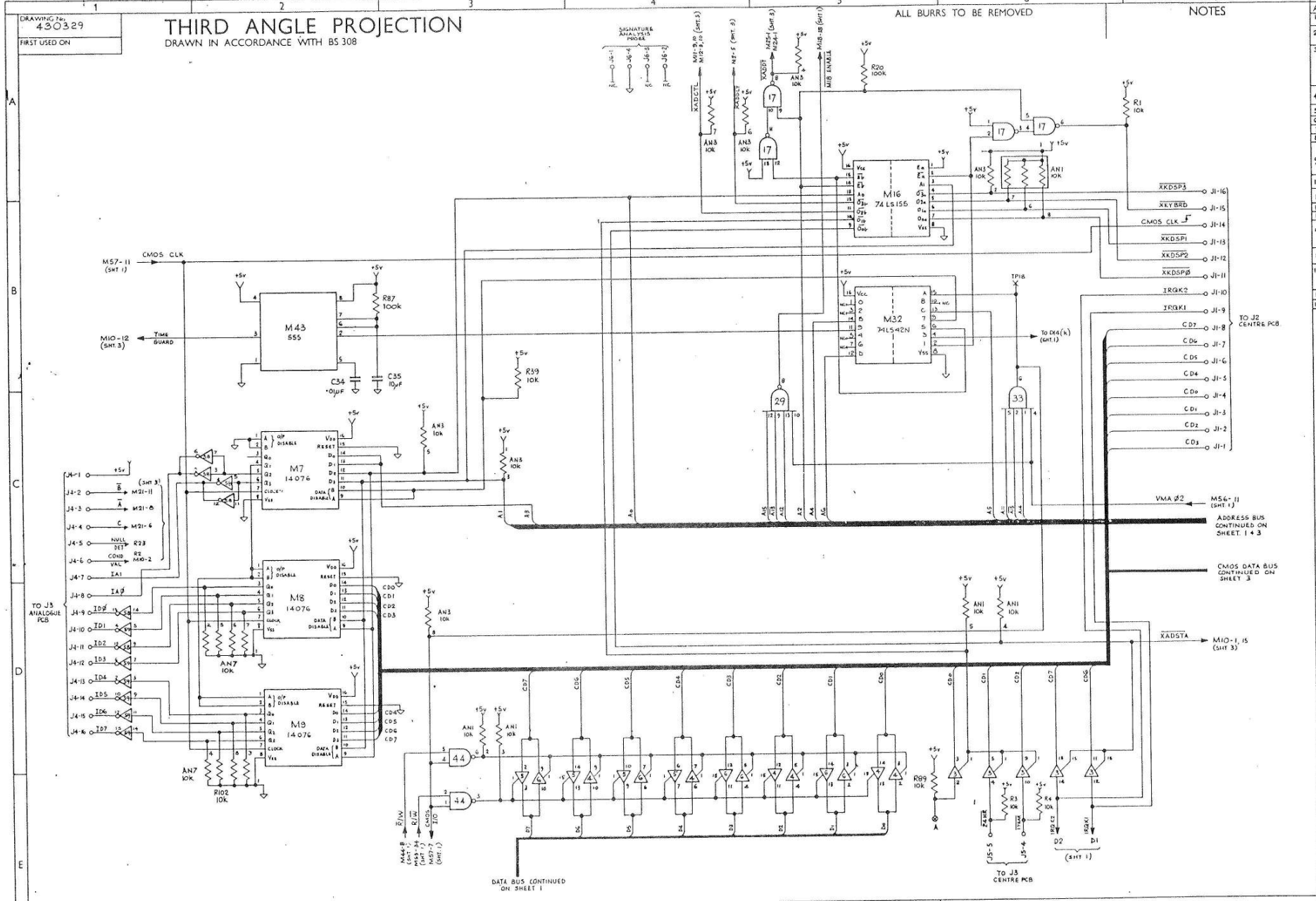

ISS.	CHANGES
A	
1	RELEASED TO PROD'N 24.11.78
2	ECO 811 PCB UPDATE TO ISS 4 IL 8.1.79
3	ECO 815 C48 100M (10210) ADDED C23 WAS 100M (1300G0) C24 WAS 100M (1300G1) C25 WAS 47M (1300G2) 29 JAN 79 NGS
4	ISS. 5 UPDATE TO PCB ECO 835/852 4-4-79 IL
5	SEE SHEETS 1 + 3
6	SEE SHEET 3
7	SEE SHEET 3
8	SEE SHEET 3
9	ECO 958 S14 LK15 - LK16 DELETED. AN7, R102 ADDED IL 8.1.80
10	SEE SHEETS 3, 4 + 5 IL 24.3.80
11	SEE SHEETS 1, 3 + 5 IL 18.4.80
12	SEE SHEET 4
13	SEE SHEET 3
15	ECO 1214 IA8 AND IA1 DRIVES INCREASED. JR 17.6.81
16	ECO 1243, 1251 SEE SHEET 1
17	ECO 1542. BJ. M52 WAS 74LS155. SEE SHT 5. 28-2-84
18	SEE SHEET 1
19	SEE SHEETS 1 + 4

DRAWN	CHECKED	DIMENSIONS IN	TOLERANCES	MATERIAL	DRAWING SIZE
IL	P.R.H.	MILLIMETRES	INCH DIMENSIONS: DECIMAL TO 3 PLACES ± .005; DECIMAL TO 2 PLACES ± .010; FRACTIONAL ± 1/64	—	A1
TRACED	APPROVED	SCALE —	METRIC DIMENSIONS: DECIMAL TO 2 PLACES ± 1mm; DECIMAL TO 1 PLACE ± 2mm; WHOLE DIMENSIONS ± 4mm	FINISH —	
DATE 13 9 78	DATE	NOT TO BE SCALED	UNLESS OTHERWISE STATED		

datron ELECTRONICS LTD. NORWICH.

TITLE 1061 CMOS ADDRESS DECODE + I/O CIRCUIT

DRAWING No. 430329

SHEET 2 OF 5

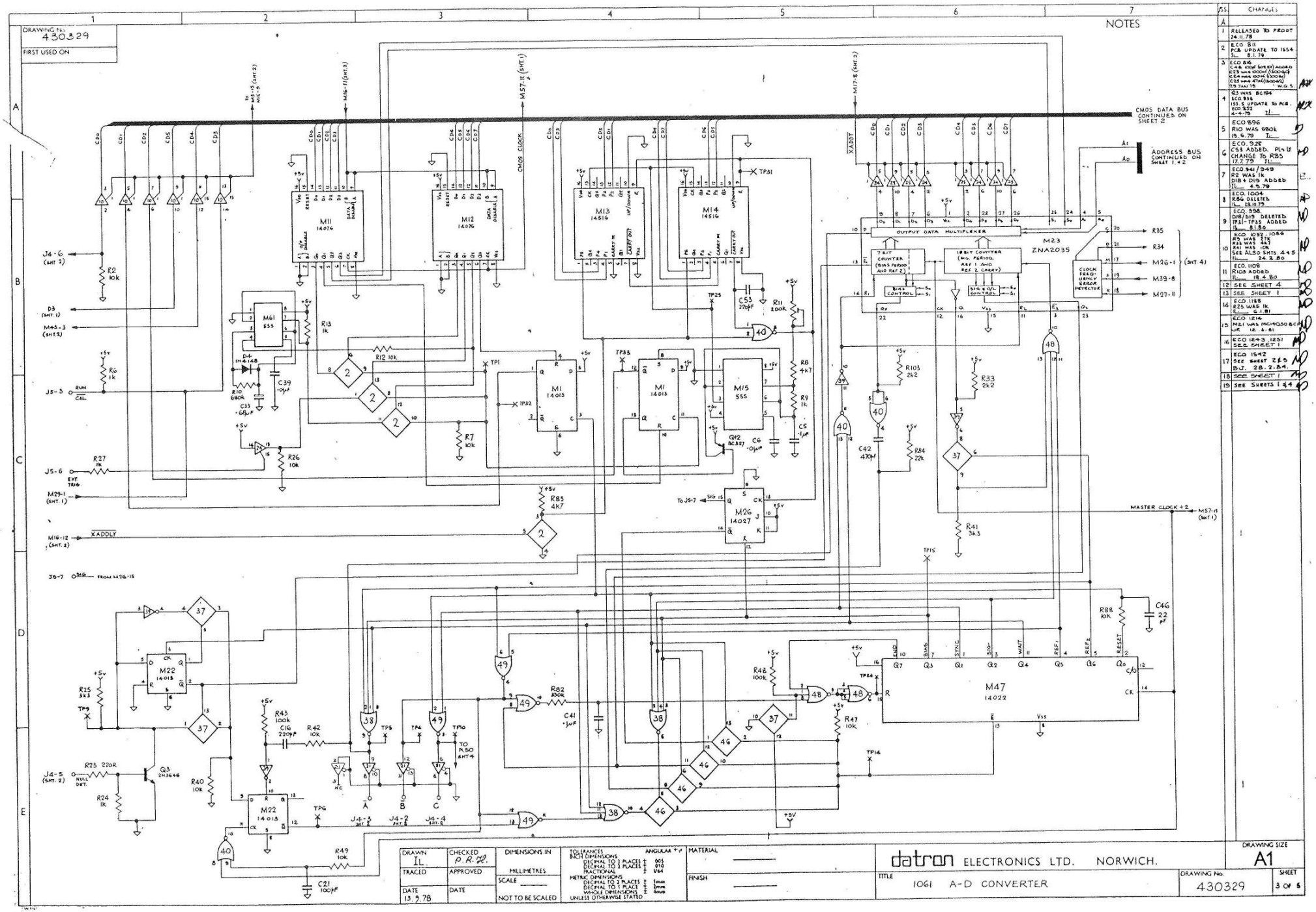

ISS.	CHANGES
A	
1	RELEASED TO PROD. 24.11.78
2	ECO 811 PCB UPDATE TO ISS4 IL 8.1.79
3	ECO 816 C48 100pF (60%) ADDED C23 was 1000pF (3000pF) C24 was 100pF (3000pF) C25 was 47pF (3000pF) 29 JAN 79 W.G.S.
4	Q3 WAS BC194 ECO 936 ISS. 5 UPDATE TO PCB. ECO 852 4-4-79 IL
5	ECO 896 R10 WAS 680k 19.6.79 IL
6	ECO. 928 CS3 ADDED. PLS LT CHANGE TO R85 17.7.79 IL
7	ECO 941/949 R2 WAS 1k D18 + D19 ADDED IL 4.9.79
8	ECO. 1004 R86 DELETED IL 28.10.79
9	ECO. 998. D18/D19 DELETED TP31-TP35 ADDED IL 8.1.80
10	ECO 1092, 1086 R9 WAS 27k R33 WAS 4k7 R41 WAS 10k SEE ALSO SHTS. 4+5 IL 24.3.80
11	ECO. 1109 R103 ADDED IL 18.4.80
12	SEE SHEET 4
13	SEE SHEET 1
14	ECO 1188 R25 WAS 1k IL 6.1.81
15	ECO 1214 M21 WAS MC14050 BCP UR 12.6.81
16	ECO 1243, 1251 SEE SHEET 1
17	ECO 1542 SEE SHEET 2 & 5 BJ. 28.2.84.
18	SEE SHEET 1
19	SEE SHEETS 1 & 4

DRAWING No. 430329

FIRST USED ON 1061

THIRD ANGLE PROJECTION

DRAWN IN ACCORDANCE WITH BS 308

ALL BURRS TO BE REMOVED

NOTES

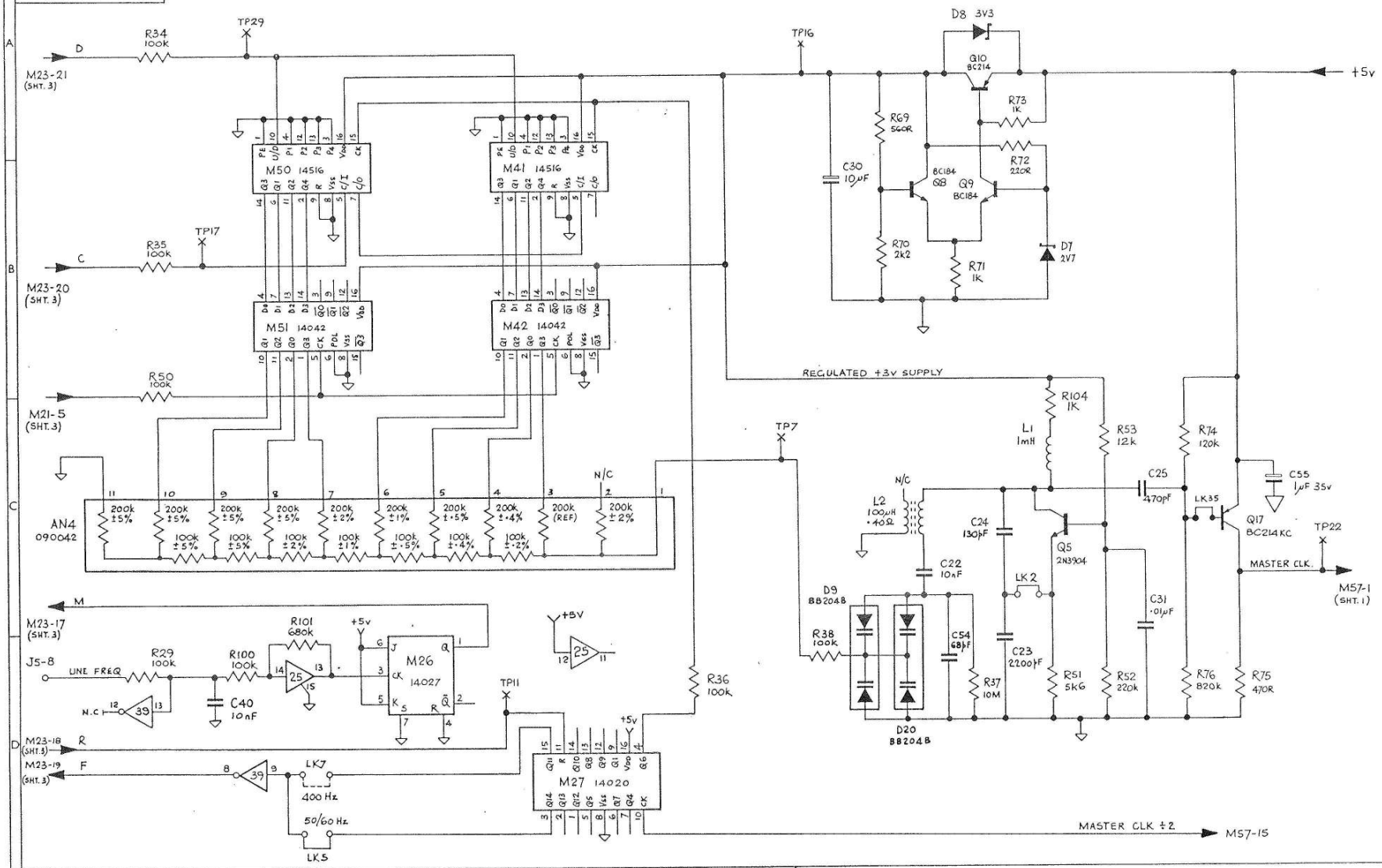

ISS.	CHANGES
A	
1	RELEASED TO PROD 24.11.78
2.	ECO 811 PCB UPDATE TO ISSUE 4 IL. 8.1.79
3	ECO 815 C48 100pF (102101) ADDED. C23 WAS 1000pF (130080) C24 WAS 100pF (130061) C25 WAS 47pF (130062) 29-JAN-79 W.G.G.
4	ISS 5 UPDATE TO PCB ECO 835/852 4-4-79 IL
5	SEE SHEETS 1 & 3
6	SEE SHEET 3
7	SEE SHEET 3
8	SEE SHEET 3
9	ECO.998 M25 PINS 14 & 13 WERE M39 PINS 13 & 12 RESP. R100, R101 ADDED IL 8.1.80
10	ECO.1046. R98 REPLACED BY LK35 Q11 DELETED. D9 WAS MVAM-2 D20, C54, C55 & Q17 ADDED. C22 WAS 470pF R76 WAS 83k R52 WAS 12k R51 WAS 100R IL 24.3.80
11	SEE SHEETS 1 3 AND 5 IL 18.4.80
12	ECO. 1135 R51 WAS 12k Q17 WAS 2N3906 R104 ADDED. IL 18.6.80
13	SEE SHEET 1
14	SEE SHEET 3
15	ECO 1214 SEE SHEETS – 1, 3, 5.
16	ECO 1243, 1251 SEE SHEET 1
17	ECO 1542 SEE SHEET 2 & 5 B.J. 28-2-84
18	SEE SHEET 1
19	ECO. 1750 C40 WAS ·1µF IL 1.11.84

DRAWN	CHECKED	DIMENSIONS IN MILLIMETRES	TOLERANCES ANGULAR ± ½° INCH DIMENSIONS DECIMAL TO 3 PLACES ± ·005 DECIMAL TO 2 PLACES ± ·010 FRACTIONAL ± 1/64 METRIC DIMENSIONS DECIMAL TO 2 PLACES ± 1mm DECIMAL TO 1 PLACE ± 2mm WHOLE DIMENSIONS ± 4mm UNLESS OTHERWISE STATED	MATERIAL	datron ELECTRONICS LTD. NORWICH.	DRAWING SIZE A2
TRACED	APPROVED	SCALE		FINISH	TITLE 1061 LINE LOCKING CIRCUIT	DRAWING No. 430329
DATE 18.9.78	DATE	NOT TO BE SCALED				SHEET 4 OF 5

DRAWING No.	FIRST USED ON
430329	

THIRD ANGLE PROJECTION

DRAWN IN ACCORDANCE WITH BS 308

ALL BURRS TO BE REMOVED

NOTES

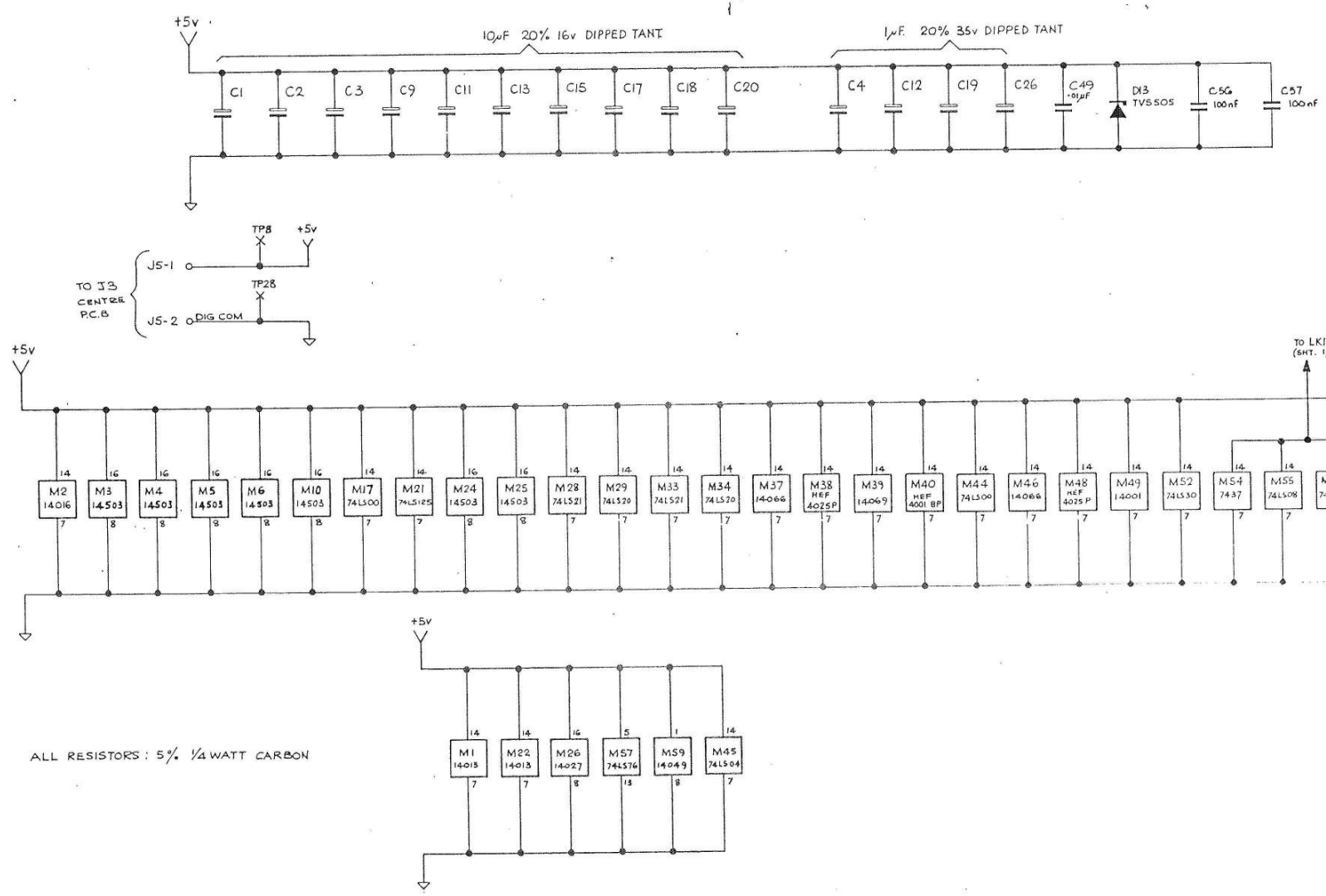

ALL RESISTORS : 5% ¼ WATT CARBON

ISS.	CHANGES
A	
1	RELEASED TO PROD 24.11.78
2	ECO 811 PCB UPDATE TO ISSUE 4 IL 8.1.79
3	ECO 815 C46 100nF (50201) ADDED C23 WAS 1000µF (150060) C24 WAS 100µF (150061) C25 WAS 47µF (150062) 29 JAN 79 W.O.S.
4	155.5 UPDATE TO PCB ECO 835/852 4-4-79 IL
5	SEE SHEETS 1+3
6	SEE SHEET 3
7	SEE SHEET 3
8	SEE SHEET 3
9	ECO.998.1047 SEE SHTS 1-4 M38 WAS 14025 IL 8.1.80
10	ECO.1048 D13 WAS ICTE-5 M37+ M46 WERE 14016. IL 24.3.80
11	ECO. 1108 M40 WAS 14001 IL 18.4.80
12	SEE SHEET 4
13	SEE SHEET 1
14	SEE SHEET 3
15	ECO 1214 M21 WAS 14050 JR 12·6·81
16	ECO 1243, 1251 SEE SHEET 1
17	ECO 1542 C57 & C56 ADDED SEE SHEET 2. BJ. 28-2-84.
18	SEE SHEET 1
19	SEE SHEETS 1+4

DRAWN	CHECKED	DIMENSIONS IN	TOLERANCES ANGULAR ± °	MATERIAL
IL	P.R.H.	MILLIMETRES	NON DIMENSIONS DECIMAL TO 3 PLACES ± .005; DECIMAL TO 2 PLACES ± .010; FRACTIONAL ± 1/64	
TRACED	APPROVED	SCALE ——	METRIC DIMENSIONS DECIMAL TO 2 PLACES ± 1mm; DECIMAL TO 1 PLACE ± 2mm; WHOLE DIMENSIONS ± 4mm	FINISH
DATE 12.10.78	DATE	NOT TO BE SCALED	UNLESS OTHERWISE STATED	

datron ELECTRONICS LTD. NORWICH.

TITLE 1061 DIGITAL PCB. ASSY.

DRAWING No. 430329

DRAWING SIZE A2

SHEET 5 OF 5

DRAWING No. 400330

FIRST USED ON

THIRD ANGLE PROJECTION

DRAWN IN ACCORDANCE WITH BS 308

ALL BURRS TO BE REMOVED

NOTES

1. MAKE TP1-TP6 FROM 22 SWG. BTC WIRE - PART Nº 540002.

ISS C	CHANGES
1	RELEASED TO PRODUCTION 29.9.78
2	C18 ADDED & R40 ECO 789. 17 Nov 78. W.G.S.
3	AN2-AN4 ADDED R41 & D12 ADDED ECO 822 20-FEB 79 W.G.S.
4	R40 WAS 180Ω CODE1 NOW WIRE LINK ECO 854 10 MAY 79 W.G.S.
5	CLIP FOR J1 WAS 606005. ECO.904 21.6.79 IL
6	ECO 1000 & 1025 RIBBON CABLE CLIP WAS 606007. BJ D12 WAS B2V. IL 80
7	ECO 1217 J1 WAS 16 WAY SOCKET. JR 17·8·81
8	ECO 1253 PARTS LIST CHANGE TO J2 JR 2·12·81
9	ECO 1588 NYLATCH DELETED PCB WAS 1355A BJ. 1st MAR 84.

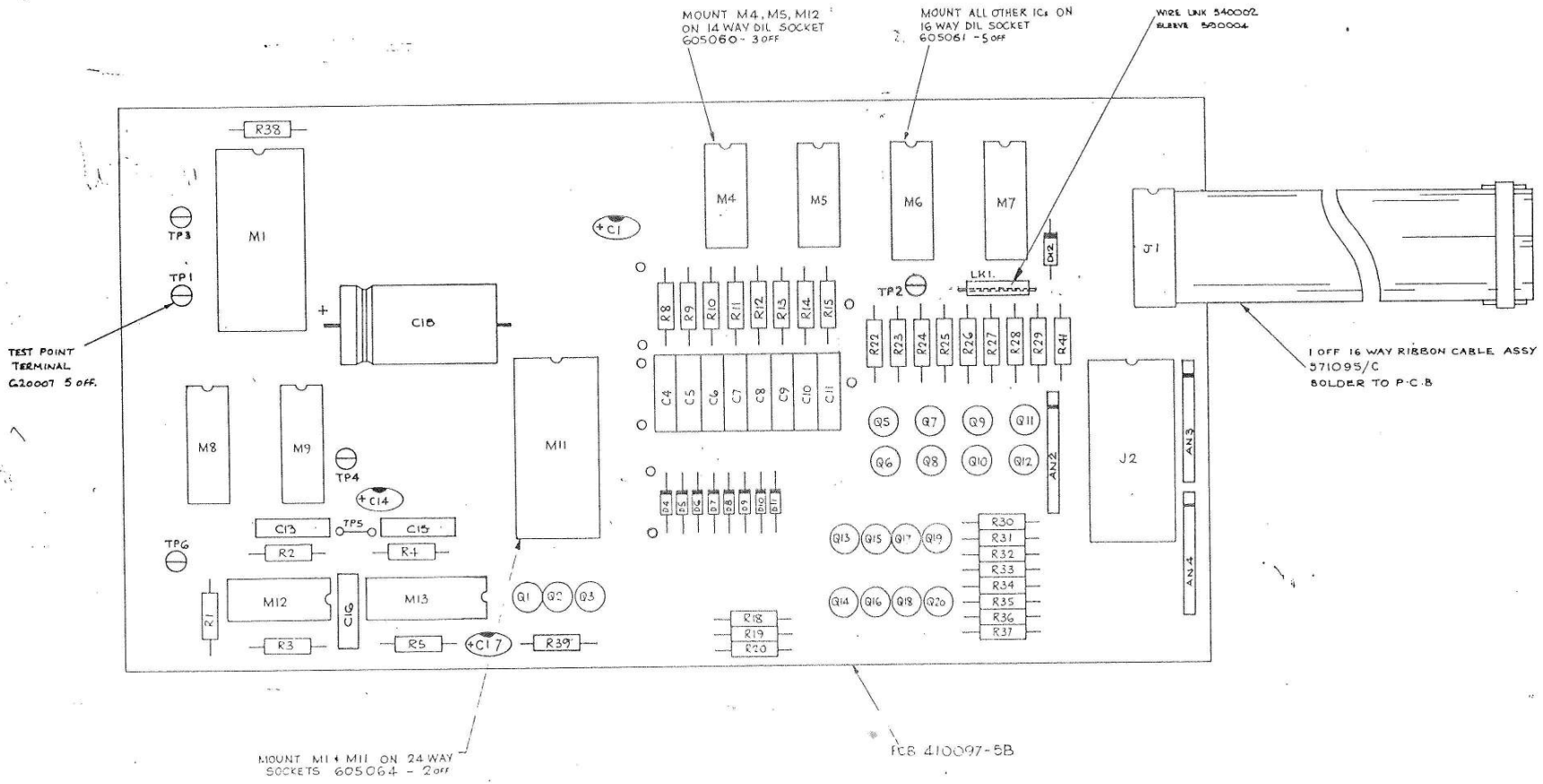

DRAWN IL	CHECKED	DIMENSIONS IN MILLIMETRES	TOLERANCES	MATERIAL SEE PARTS LIST	datron ELECTRONICS LTD. NORWICH.	DRAWING SIZE A2
TRACED	APPROVED	SCALE 2:1 NOT TO BE SCALED		FINISH	TITLE 1061 DISPLAY DRIVER PCB ASSY	DRAWING Nº 400330
DATE 3.5.78	DATE					SHEET 1 OF 7

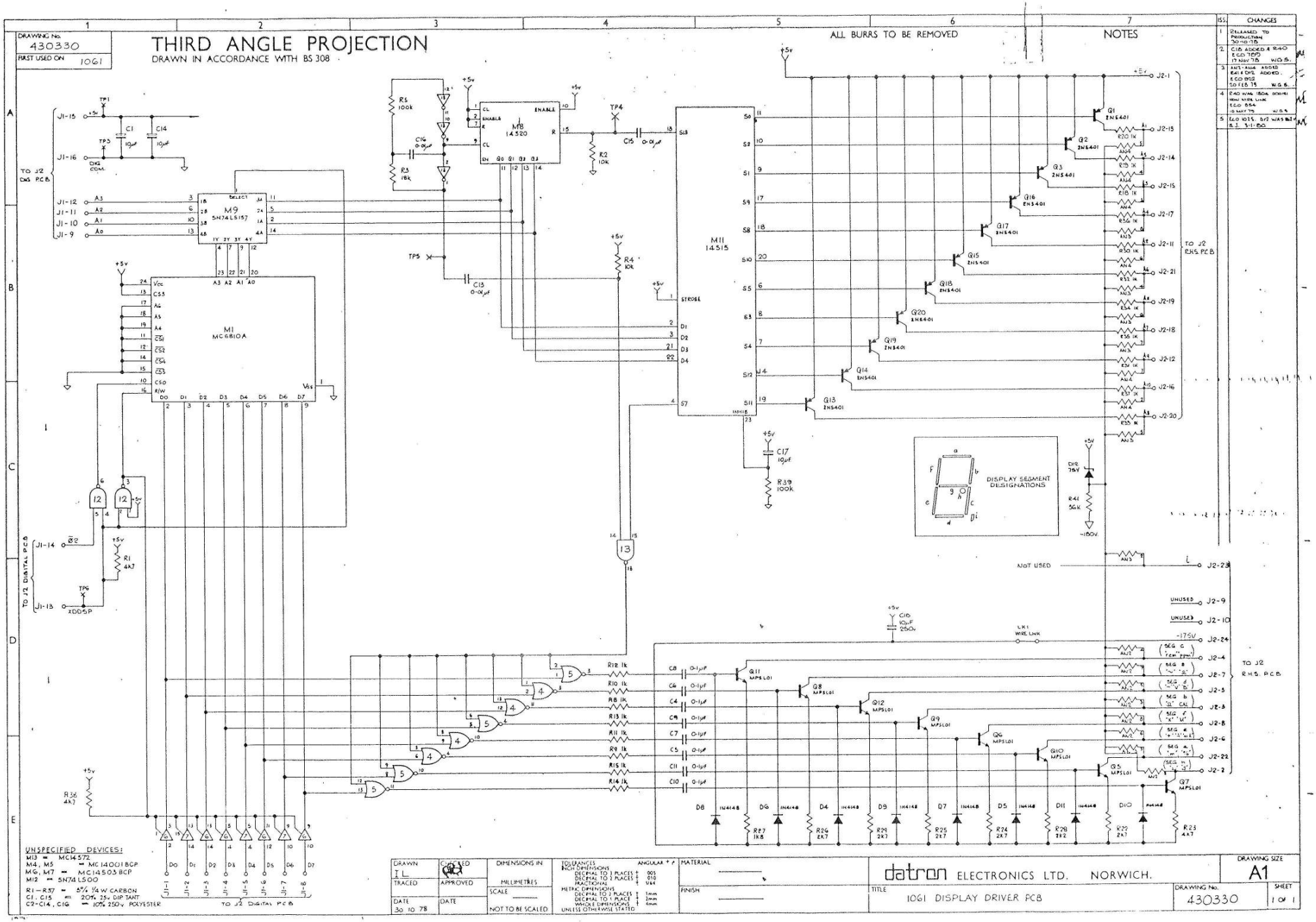

DRAWING No. 430330
FIRST USED ON 1061
THIRD ANGLE PROJECTION
DRAWN IN ACCORDANCE WITH BS 308
ALL BURRS TO BE REMOVED
NOTES
ISS. CHANGES
1 RELEASED TO PRODUCTION 30-10-78
2 C18 ADDED & R40 ECO 7893 17 NOV 78 W.G.S.
3 AN2-AN4 ADDED R41 & D12 ADDED. ECO 8922 20 FEB 79 W.G.S.
4 R40 WAS 180A 000181 NOW WIRE LINK ECO 8564 10 MAY 79 W.G.S.
5 ECO 1025. D12 WAS 82V B.J. 3-1-80
M9 SN74LS157
M1 MC6810A
M8 14520
M11 14515
TO J2 DIG PCB
TO J2 DIGITAL PCB
TO J2 R.H.S. PCB
DISPLAY SEGMENT DESIGNATIONS
NOT USED
UNUSED
LK1 WIRE LINK
UNSPECIFIED DEVICES:
M13 = MC14572
M4, M5 = MC14001BCP
M6, M7 = MC14503BCP
M12 = SN74LS00
R1-R37 = 5% 1/4 W CARBON
C1, C15 = 20% 25v DIP TANT
C2-C14, C16 = 10% 250v POLYESTER
DRAWN IL
TRACED
DATE 30 10 78
CHECKED
APPROVED
DATE
DIMENSIONS IN MILLIMETRES
SCALE
NOT TO BE SCALED
TOLERANCES
ANGULAR ± 1°
INCH DIMENSIONS
DECIMAL TO 1 PLACES ± .005
DECIMAL TO 2 PLACES ± .010
FRACTIONAL ± 1/64
METRIC DIMENSIONS
DECIMAL TO 2 PLACES ± 1mm
DECIMAL TO 1 PLACE ± 2mm
WHOLE DIMENSIONS ± 4mm
UNLESS OTHERWISE STATED
MATERIAL
FINISH
datron ELECTRONICS LTD. NORWICH.
TITLE 1061 DISPLAY DRIVER PCB
DRAWING SIZE A1
DRAWING No. 430330
SHEET 1 OF 1

DRAWING No. 400331

FIRST USED ON 1061

THIRD ANGLE PROJECTION

DRAWN IN ACCORDANCE WITH BS 308

ALL BURRS TO BE REMOVED

NOTES

ISS.	CHANGES
12	ECO 1176 ASSY COMPLETELY RE-DRAWN. PCB WAS ISSUE 4. R71 – R74 ADDED R66/R70 TRACKED-IN. R10 DELETED. C27 D28 ADDED. C26 D27 TRACKED-IN OTHER PARTS LIST CHANGES - SEE ECO. IL 28.11.80
13	ECO 1217 U4 WAS 16 WAY SOCKET UK 18.8.81.
14	ECO 1300. R34, R48 & R66 VALUE CHANGE R66 POSITION CHANGE SOM MAR 82.
15	ECO 1667. C28 ADDED. R66 NOW ON TOP OF PCB. DJ 7th AUG 84.

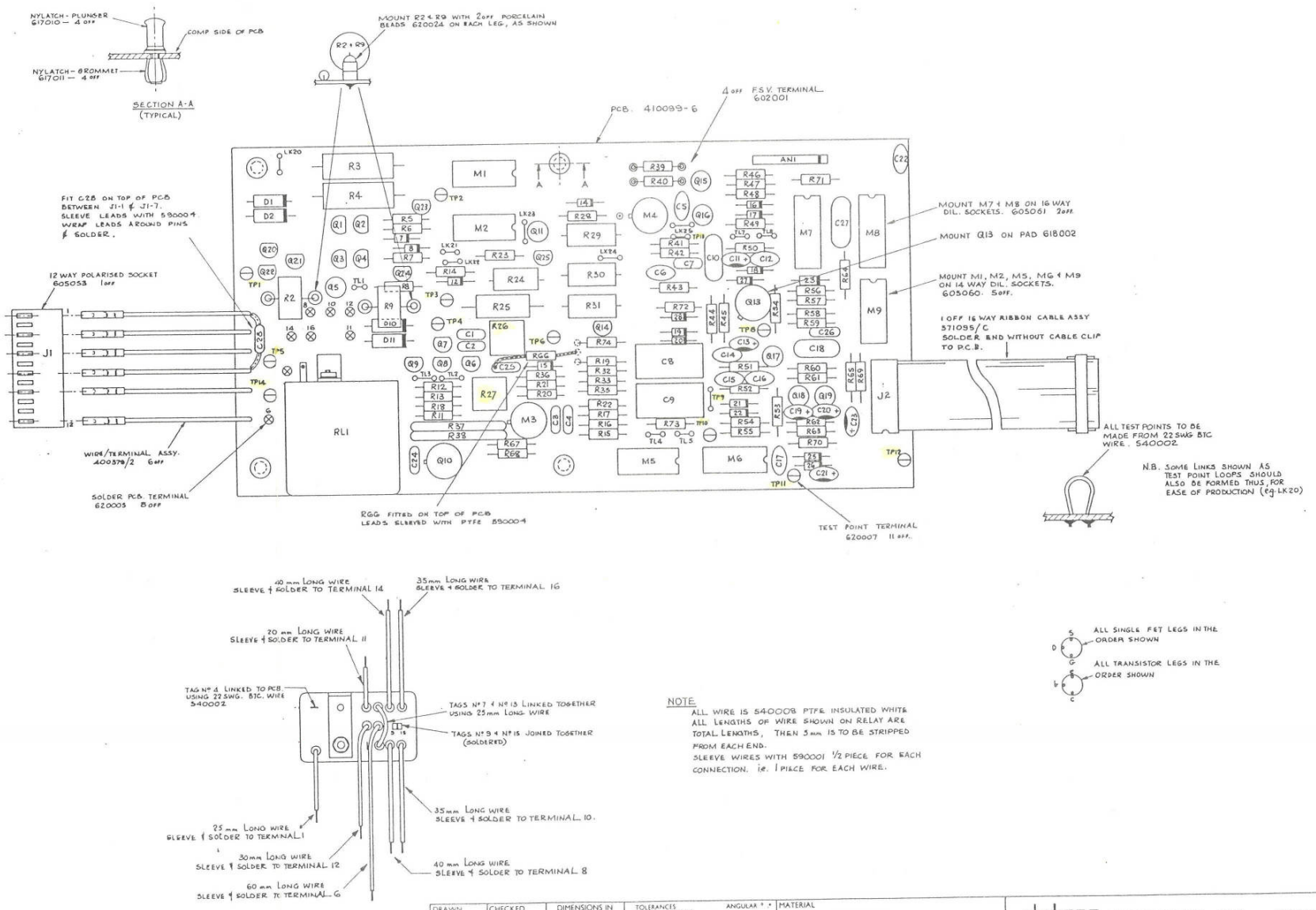

NOTE.

ALL WIRE IS 540008 PTFE INSULATED WHITE
ALL LENGTHS OF WIRE SHOWN ON RELAY ARE TOTAL LENGTHS, THEN 3mm IS TO BE STRIPPED FROM EACH END.
SLEEVE WIRES WITH 590001 ½ PIECE FOR EACH CONNECTION. ie. 1 PIECE FOR EACH WIRE.

DRAWN IL	CHECKED	DIMENSIONS IN MILLIMETRES	TOLERANCES INCH DIMENSIONS DECIMAL TO 3 PLACES ± .005; DECIMAL TO 2 PLACES ± .010; FRACTIONAL ± 1/64; ANGULAR ± °; METRIC DIMENSIONS DECIMAL TO 2 PLACES ± 1mm; DECIMAL TO 1 PLACE ± 2mm; WHOLE DIMENSIONS ± 4mm; UNLESS OTHERWISE STATED	MATERIAL	datron ELECTRONICS LTD. NORWICH.
TRACED	APPROVED	SCALE 2:1		FINISH	TITLE 1061 OHMS PCB. ASSY.
DATE 30.7.80	DATE	NOT TO BE SCALED			DRAWING No. 400331

DRAWING SIZE A1

SHEET 1 OF 12

DRAWING No. 430331.
FIRST USED ON 1061.

THIRD ANGLE PROJECTION

DRAWN IN ACCORDANCE WITH BS 308

ALL BURRS TO BE REMOVED

NOTES

ISS.	CHANGES
1	RELEASED.
2	D13 WAS 1N4148. B.J. R56 - 1M. 4-5-79 C19 = 0·1µF.
3	ECO 895. D24. BJ DELETED 20-6-79. ECO 908 D7, C&V8 NOW C2V7. R6 10K NOW 3K3. R15 15K NOW 24K.
4	ECO 950 RE-INSTATE D… ECO 953 Q21, Q22 & … U1994E's NOW J309's BJ 13-7-79.
5	ECO 1054 & 1062 … DELETED … R67 ADDED … TL6 & TP7 DELETED … R35 WAS … R66 & R68 ADDED C24 & C25 ADDED W.G.S. 6-FEB-80
6	SEE SHEET 2
7	ECO. 1124 C7 WAS 3n3F 3.6.80
8	ECO. 1134 D27 ADDED. 19.6.80
9	ECO. 1176 R72 R73. R74. + D28 ADDED. R10 DELETED. R26 WAS 20K R35 WAS 1M2 SEE ALSO SHEET 2 12.12.80
10	ECO 1300 R54 WAS 680R R48 - 82K R66 WAS JOINED TO Q14, R19 NOW TO … 30th MAR 82 BJ
11	ECO 1667. C28 ADDED. 7th AUG 84.

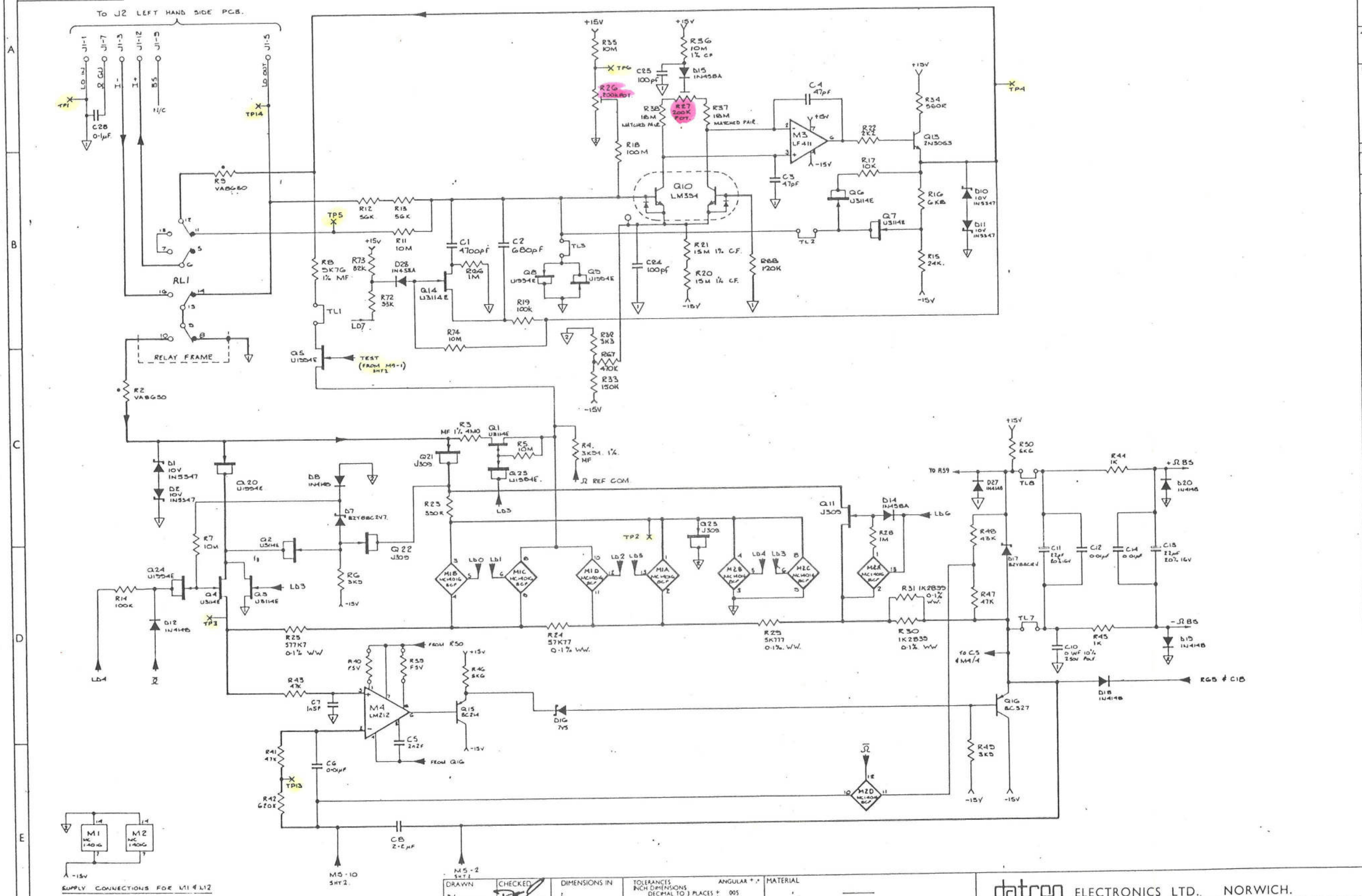

DRAWN	CHECKED	DIMENSIONS IN	TOLERANCES	MATERIAL	
BJ		MILLIMETRES	INCH DIMENSIONS: DECIMAL TO 3 PLACES ± .005; DECIMAL TO 2 PLACES ± .010; FRACTIONAL ± 1/64. ANGULAR ± °		
TRACED	APPROVED	SCALE	METRIC DIMENSIONS: DECIMAL TO 2 PLACES ± ·1mm; DECIMAL TO 1 PLACE ± ·2mm; WHOLE DIMENSIONS ± ·4mm	FINISH	
DATE 20-4-79	DATE	NOT TO BE SCALED	UNLESS OTHERWISE STATED		

datron ELECTRONICS LTD. NORWICH.

TITLE: OHMS PCB CIRCUIT 1061.

DRAWING SIZE A1

DRAWING No. 430331

SHEET 1 OF 2

DRAWING No.	430331
FIRST USED ON	1061

THIRD ANGLE PROJECTION

DRAWN IN ACCORDANCE WITH BS 308

ALL BURRS TO BE REMOVED

NOTES

ISS.	CHANGES
1	RELEASED.
2.	D25 WAS 1N4148 B.J. R56 WAS 1M. ECO837 C19 - 0·1µF 11-5-79.
3	ECO 858. D24 B.J. DELETED. 20-6-79. ECO 909. D7, 6V8 NOW 2V7. R6, 10K NOW 3K9. R15, 18K NOW 24K.
4	ECO 930 RE-INSTATE D25 ECO 955 Q21, Q22 & Q23 2N5946'S NOW J309's B.J. 13-7-79.
5	ECO 1054 & 1062 SEE SHT 1 FOR DETAILS W.G.S. 6 FEB 80
6	ECO.1109 C26 ADDED IL 21.4.80
7	ECO. 1115. C26 WAS 1nF R69 ADDED. IL 3.6.80
8	ECO.1134 R70 ADDED IL 19.6.80
9	ECO.1176 R71 + C27 ADDED IL 12.12.80
10	ECO 1300 R65 WAS 2K7 30th MAR 82 BJ
11	SEE SHEET 1.

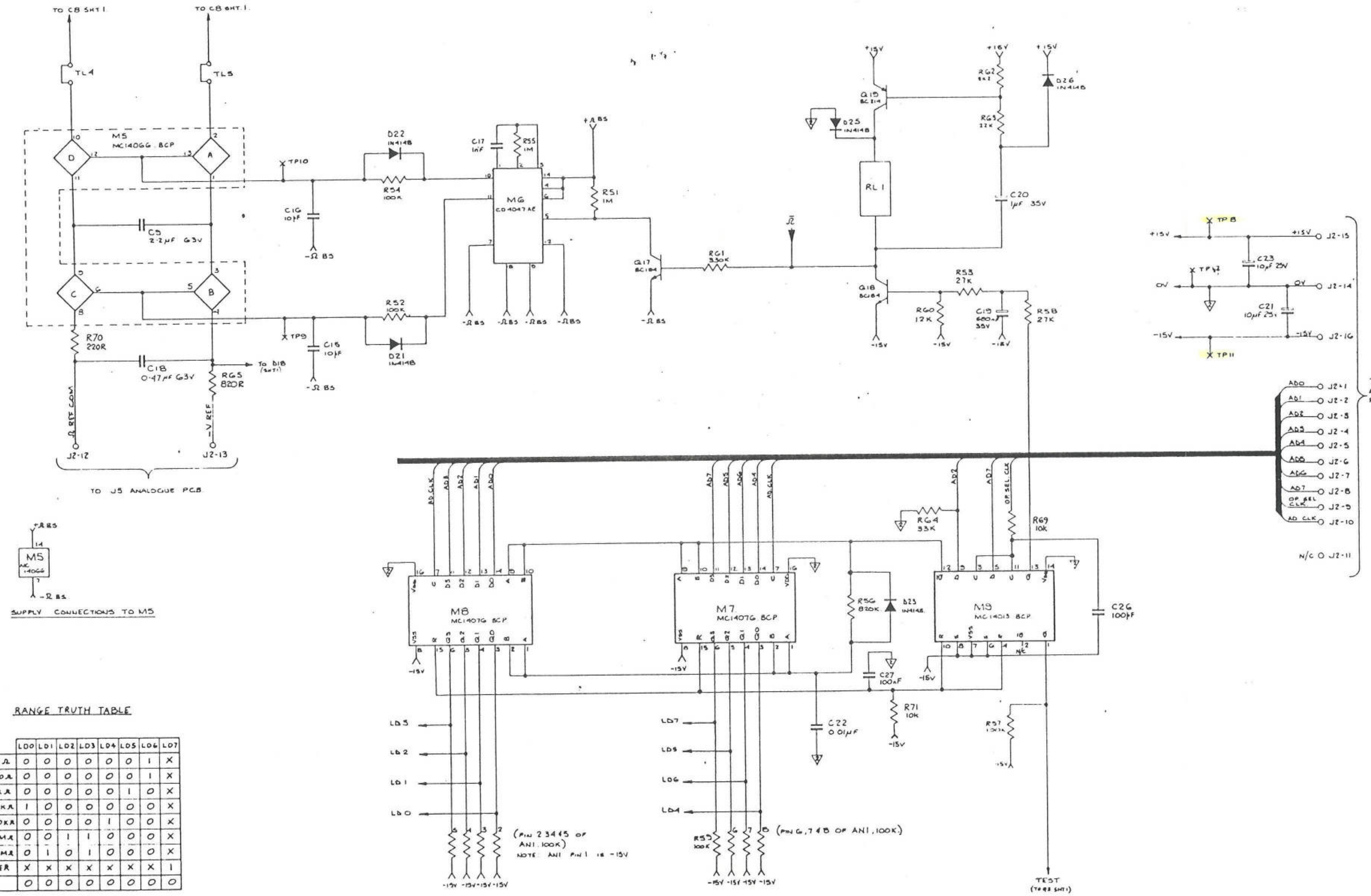

RANGE TRUTH TABLE

		LD0	LD1	LD2	LD3	LD4	LD5	LD6	LD7
RANGE	10Ω	0	0	0	0	0	0	1	X
	100Ω	0	0	0	0	0	0	1	X
	1KΩ	0	0	0	0	0	1	0	X
	10KΩ	1	0	0	0	0	0	0	X
	100KΩ	0	0	0	0	1	0	0	X
	1MΩ	0	0	1	1	0	0	0	X
	10MΩ	0	1	0	1	0	0	0	X
FILTER		X	X	X	X	X	X	X	1
Ω		0	0	0	0	0	0	0	0

LOGIC '0' = -15V
LOGIC '1' = 0V
LOGIC 'X' = 'DONT CARE' CONDITION

DRAWN	CHECKED	DIMENSIONS IN	TOLERANCES	MATERIAL
BJ		MILLIMETRES	INCH DIMENSIONS DECIMAL TO 3 PLACES ± .005 DECIMAL TO 2 PLACES ± .010 FRACTIONAL ± 1/64 ANGULAR ±	
TRACED	APPROVED	SCALE	METRIC DIMENSIONS DECIMAL TO 2 PLACES ± 1mm DECIMAL TO 1 PLACE ± 2mm WHOLE DIMENSIONS ± 4mm UNLESS OTHERWISE STATED	FINISH
DATE 20-4-79	DATE	NOT TO BE SCALED		

datron ELECTRONICS LTD. NORWICH.

TITLE: OHMS PCB CIRCUIT 1061.

DRAWING SIZE A1

DRAWING No. 430331

SHEET 2 OF 2

DRAWING No. 400332

FIRST USED ON

THIRD ANGLE PROJECTION

DRAWN IN ACCORDANCE WITH BS 308

ALL BURRS TO BE REMOVED

NOTES

ISS	CHANGES
1	RELEASED TO PRODT IL 12.80
2	ECO. 1078 TEST POINTS TP1-TP9 ADDED J3 PINS RE-ORGANISED PCB. WAS 155.3 IL 22.2.80
3	ECO. 1093 PARTS LIST CHANGE IL 26.3.80
4	ECO. 1137 PARTS LIST CHANGE IL 29.7.80
5	ECO. 1168 PARTS LIST CHANGE IL 16.12.80
6	ECO 1198 605056 CRIMP ADDED TO J4 JA 25.2.81
7	ECO 1217 J5 WAS 24 WAY SOCKET. JA 16.6.81
8	ECO. 1246 PARTS LIST CHANGE IL 4.11.81
9	ECO 1253 J1 & 2 WERE 605064 JA 3.12.81
10	ECO. 1403 PARTS LIST CHANGE TO MII (155.4A for 17) IL 24.11.82
11	ECO. 1592 PCB WAS ISSUE 4. NT LATCHES REMOVED MII (EPROM) WAS 155.17. IL 2.5.84

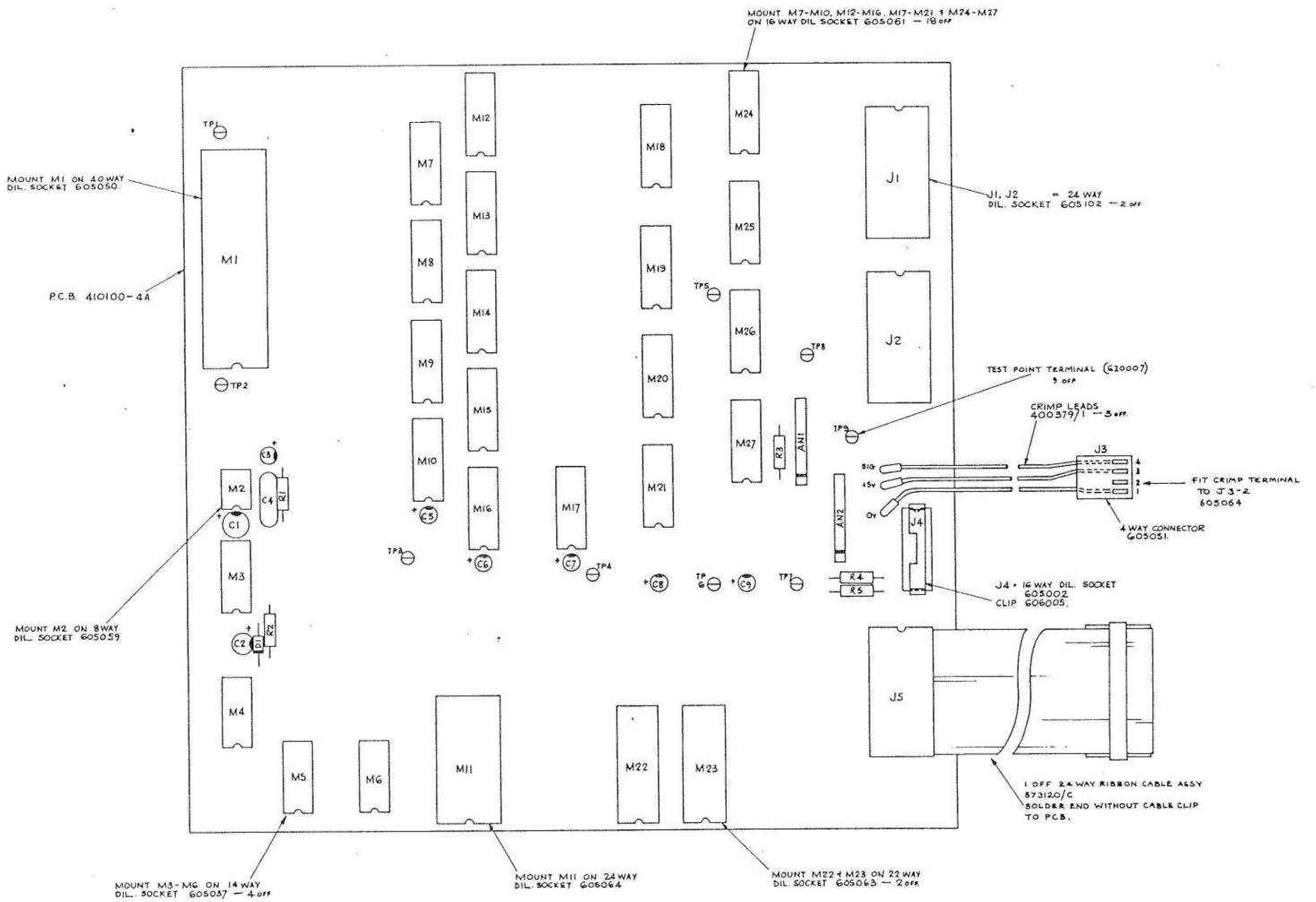

CIRCUIT DIAGRAM = 430332-2

DRAWN IL	CHECKED	DIMENSIONS IN MILLIMETRES	TOLERANCES ANGULAR ± ° INCH DIMENSIONS DECIMAL TO 3 PLACES ± .005 DECIMAL TO 2 PLACES ± .010 FRACTIONAL ± 1/64 METRIC DIMENSIONS DECIMAL TO 2 PLACES ± 1mm DECIMAL TO 1 PLACE ± 2mm WHOLE DIMENSIONS ± 4mm UNLESS OTHERWISE STATED	MATERIAL	datron ELECTRONICS LTD. NORWICH.	DRAWING SIZE A1
TRACED	APPROVED	SCALE 2:1 NOT TO BE SCALED		FINISH	TITLE BCD/PROGRAM PCB. ASSY.	DRAWING No. 400332 SHEET 1 OF 4
DATE 31.1.80	DATE					

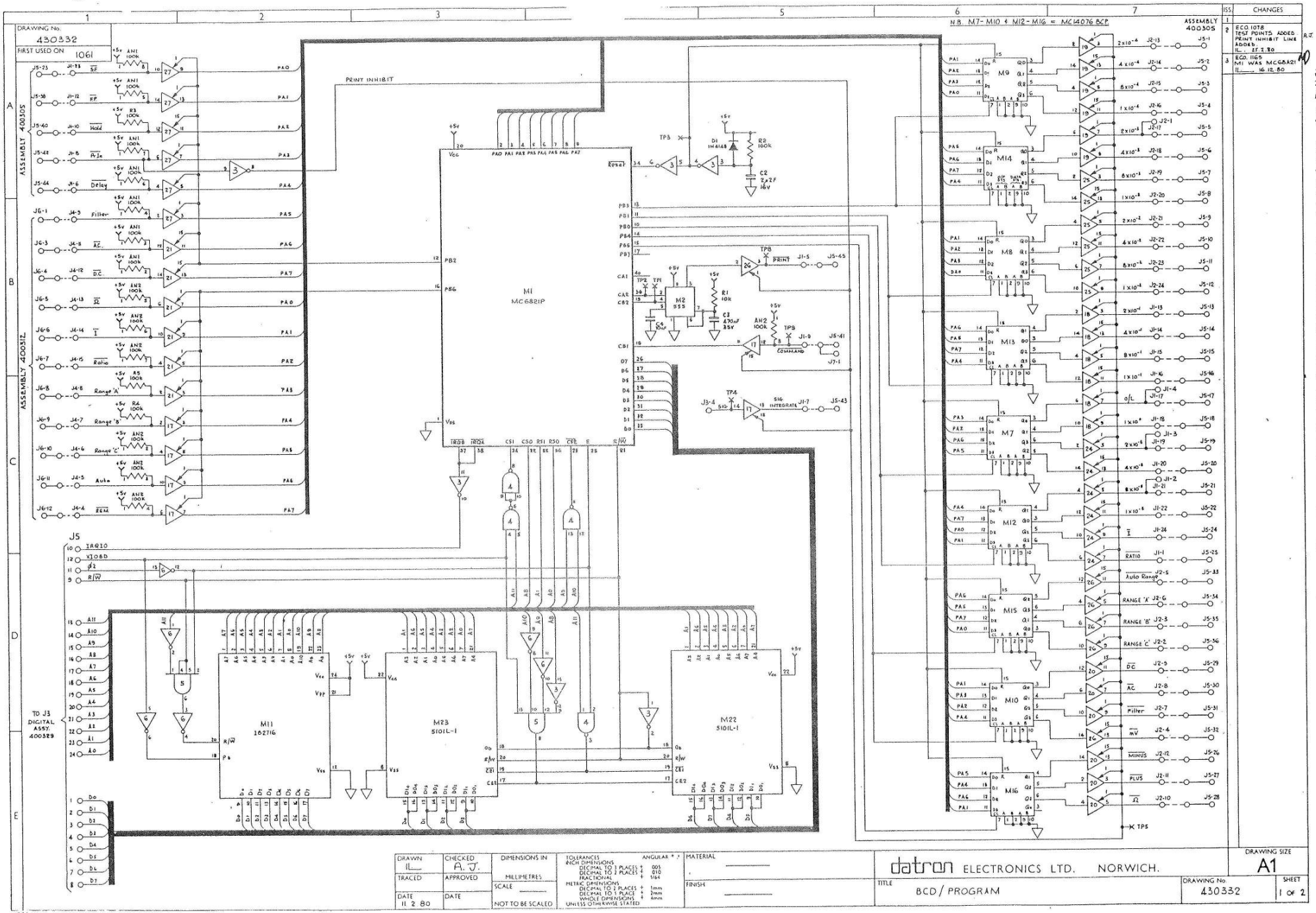

ISS	CHANGES
1	
2	ECO 1078 TEST POINTS ADDED PRINT INHIBIT LINE ADDED. IL. 15.2.80
3	ECO. 1165 M1 WAS MC6BA21 IL. 16.12.80

DRAWN IL	CHECKED A. J.	DIMENSIONS IN MILLIMETRES	TOLERANCES INCH DIMENSIONS DECIMAL TO 3 PLACES ± .005; DECIMAL TO 2 PLACES ± .010; FRACTIONAL ± 1/64; METRIC DIMENSIONS DECIMAL TO 2 PLACES ± 1mm; DECIMAL TO 1 PLACE ± 2mm; WHOLE DIMENSIONS ± 4mm; UNLESS OTHERWISE STATED. ANGULAR ± °	MATERIAL	datron ELECTRONICS LTD. NORWICH.
TRACED	APPROVED	SCALE NOT TO BE SCALED		FINISH	TITLE BCD / PROGRAM
DATE 11 2 80	DATE				DRAWING No. 430332

DRAWING SIZE A1

SHEET 1 OF 2

DRAWING No.	FIRST USED ON
430332	1061

THIRD ANGLE PROJECTION

DRAWN IN ACCORDANCE WITH BS 308

ALL BURRS TO BE REMOVED

NOTES

ISS.	CHANGES	
1		
2	TPG & TP7 ADDED IL 22.2.80	A.J.
3	SEE SHEET 1	

N.B. ALL RESISTORS SHOWN ON SHEET 1 ± 5%, ¼ W, CARBON FILM.

ASSEMBLY 400305 J5-39 — J1-11 DIG. COM.

ASSEMBLY 400312 J6-2 — J4-10

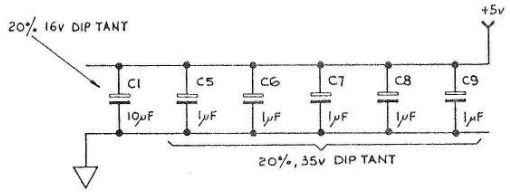

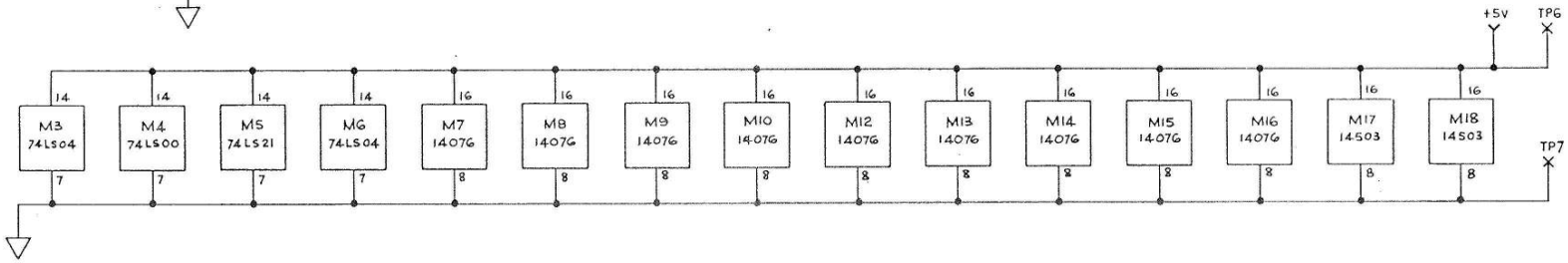

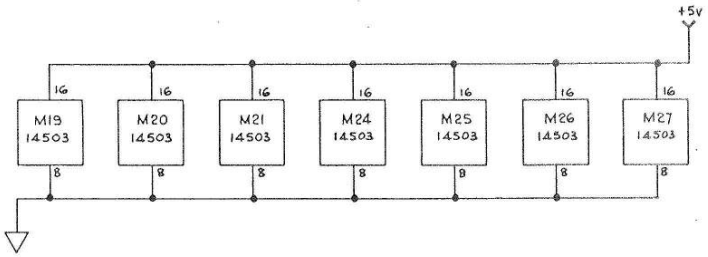

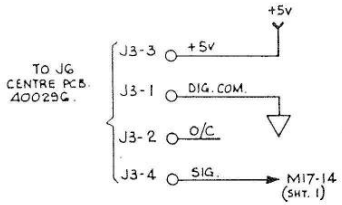

DRAWN	DATE	DIMENSIONS IN	METRIC DIMENSIONS	MATERIAL
IL	11.2.80	MILLIMETRES	ANGULAR ± ½°	
CHKD.	DATE	SCALE	DECIMAL TO 2 PLACES ± 1mm	
A.J.	15.2.80		DECIMAL TO 1 PLACE ± 2mm	FINISH
APPD.	DATE	NOT TO BE SCALED	WHOLE DIMENSIONS ± 4mm	
			UNLESS OTHERWISE STATED	

datron ELECTRONICS LTD. NORWICH.

DRAWING SIZE A2

TITLE BCD/PROGRAM

DRAWING No. 430332

SHEET 2 OF 2

J.W. 2042

DRAWING No. 400386
FIRST USED ON 1061/1071

THIRD ANGLE PROJECTION

DRAWN IN ACCORDANCE WITH BS 308

ALL BURRS TO BE REMOVED

NOTES

IMPORTANT

FOR CRIMP PINS USE TOOL Nº HTR2262A.

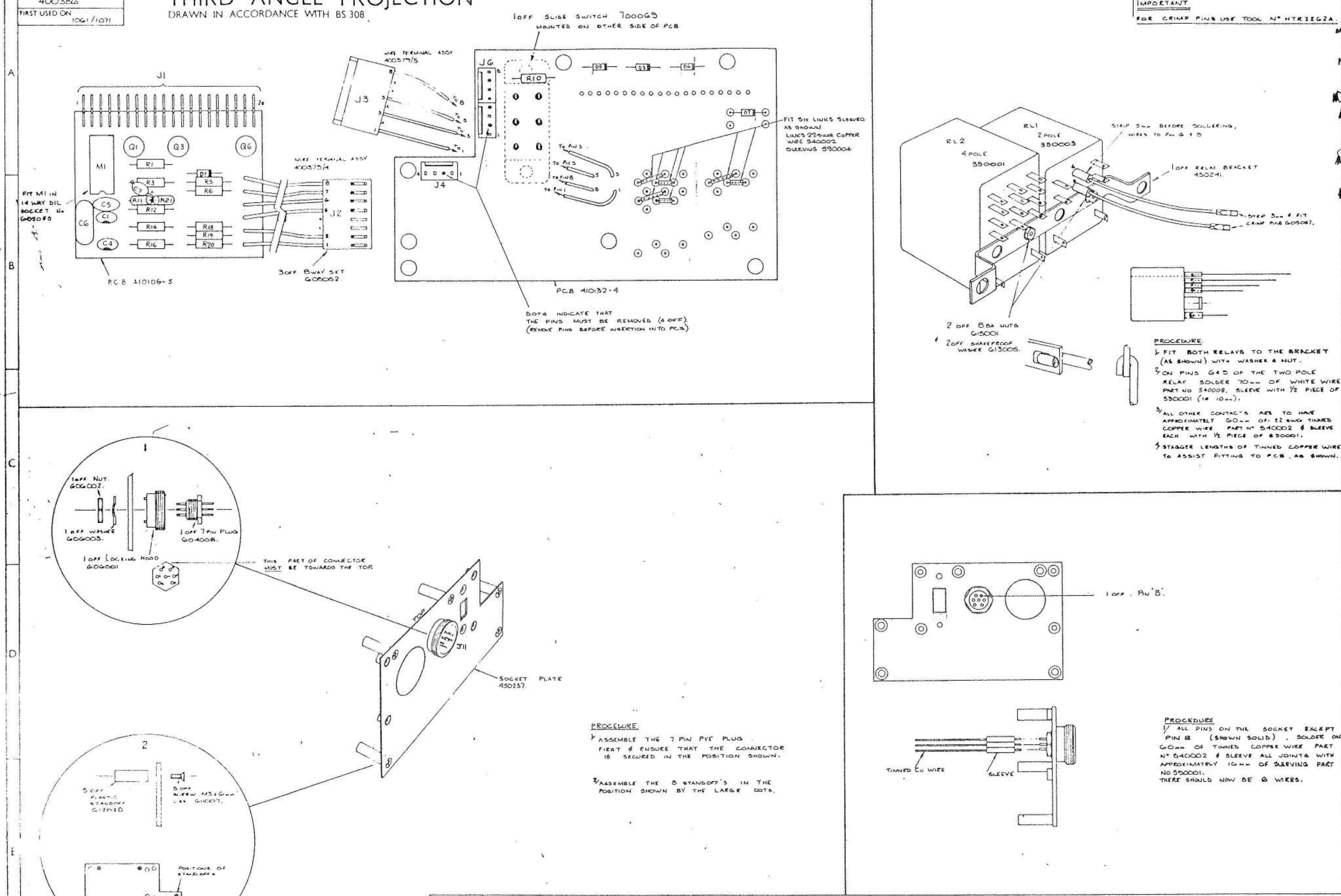

PROCEDURE.
1/ FIT BOTH RELAYS TO THE BRACKET (AS SHOWN) WITH WASHER & NUT.
2/ ON PINS 6 & 5 OF THE TWO POLE RELAY SOLDER 70mm OF WHITE WIRE PART No 540008, SLEEVE WITH 1/2 PIECE OF 530001 (IE 10mm).
3/ ALL OTHER CONTACTS ARE TO HAVE APPROXIMATELY 60mm OF 22 AWG TINNED COPPER WIRE PART Nº 540002 & SLEEVE EACH WITH 1/2 PIECE OF 530001.
4/ STAGGER LENGTHS OF TINNED COPPER WIRE, TO ASSIST FITTING TO PCB, AS SHOWN.

PROCEDURE
1/ ASSEMBLE THE 7 PIN PYE PLUG FIRST & ENSURE THAT THE CONNECTOR IS SECURED IN THE POSITION SHOWN.
2/ ASSEMBLE THE 5 STANDOFF'S IN THE POSITION SHOWN BY THE LARGE DOTS.

PROCEDURE
1/ ALL PINS ON THE SOCKET EXCEPT PIN B (SHOWN SOLID), SOLDER ON 60mm OF TINNED COPPER WIRE PART Nº 540002 & SLEEVE ALL JOINTS WITH APPROXIMATELY 16mm OF SLEEVING PART No 530001.
THERE SHOULD NOW BE 8 WIRES.

ISS	CHANGES
1	RELEASED to PRODUCTION 05.79
2	ECO 972 & 995. RL1 & RL2 WERE 1ST. 450257 WAS 450188 HOLE PLUG 630001 DELETED. EJ 25-10-79
3	ECO 981. 6-11-79. R11 & R12 ADDED M1 & SOCKET ADDED. 1 OFF 400375/4 ADDED. DELETE D5. PLBS UPDATED. B.J.
4	ECO 1034. R12 MOVED & WAS 33K. 2-1-80.
5	ECO 1085 POLARISING KEY FOR J3 REMOVED. J5 REMOVED - SEE SHEET 2 22.4.80
6	ECO 1167, 1154 R10, R14, R16, R18, R19, R20 C4 C5 C6 D5 D6 D7 & Q6 ADDED. 23.9.80
7	ECO 1199 R10 WAS 12K JR 26.2.81
8	ECO 1328 R11 WAS 18K, C4 WAS 6μ8. R21 AND C7 ADDED. JR 12.5.82

DRAWN	CHECKED	DIMENSIONS IN	TOLERANCES	MATERIAL
W.G.Smith	MSD	MILLIMETRES	INCH DIMENSIONS DECIMAL TO 3 PLACES ± .005; DECIMAL TO 2 PLACES ± .010; FRACTIONAL ± 1/64; METRIC DIMENSIONS DECIMAL TO 2 PLACES ± 1mm; DECIMAL TO 1 PLACE ± 2mm; WHOLE DIMENSIONS ± 4mm; UNLESS OTHERWISE STATED; ANGULAR ± °	——
TRACED	APPROVED	SCALE		FINISH ——
DATE 10-MAY-79	DATE 17 MAY 79.	NOT TO BE SCALED		

datron ELECTRONICS LTD. NORWICH.

TITLE: REAR INPUT ASSY

DRAWING SIZE: A1

DRAWING No. 400386

SHEET 1 OF 8

DRAWING No. 400386

FIRST USED ON 1061/71

THIRD ANGLE PROJECTION

DRAWN IN ACCORDANCE WITH BS 308

ALL BURRS TO BE REMOVED

NOTES

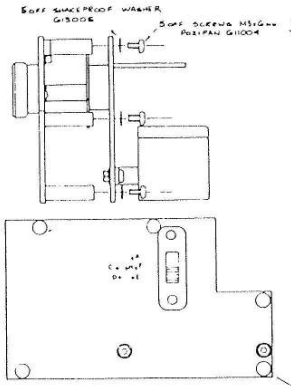

3./ BOTTOM VIEW SHOWS THE HOLES IN THE PCB (INDICATED BY CROSSES). THESE HOLES ARE FOR THE WIRES FROM THE 7 PIN SOCKET

IT IS A SUGGESTION THAT THE WIRES ARE STAGGERED TO MAKE ASSY EASIER (AS WIRING THE RELAYS).

PROCEDURE.

① THE WIRES SHOULD LINE UP WITH THE APPROPRIATE HOLES. IE WIRE FROM PIN A OF SOCKET SHOULD BE INSERTED INTO HOLE A', WIRE FROM PIN C' TO HOLE C' AND SO ON.

② WHEN THE WIRES ARE INSERTED IN THE APPROPRIATE HOLES SECURE THE 2 ASSY'S TOGETHER WITH THE M3X6mm POZI PAN SCREWS & SHAKEPROOF WASHERS, SCREWED IN THE 5 STANDOFFS. (AS DETAILED)

③ LIGHTLY PULL ON THE TIN COPPER WIRES SO THE WIRE IS TAUT, THEN SOLDER & CROP IN THE USUAL MANNER.

2./ INSERT CONNECTORS AS SHOWN SOLDER ALL 20 AMP PINS & CROP LEGS IN USUAL MANNER THE BOARD IS TO BE AT 90° WHEN SOLDERED IN.

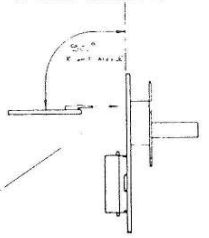

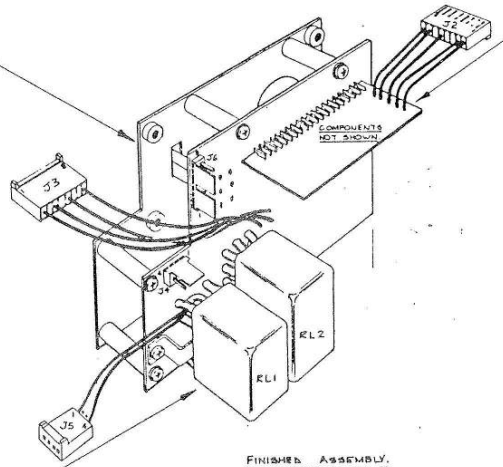

FINISHED ASSEMBLY.

1./ SKETCH BELOW SHOWS THE 2 RELAY & BRACKET ASSEMBLY (FROM SHEET 1). THE CROSSES INDICATE HOLES IN THE PCB INTO WHICH THE WIRES FROM THE RELAYS ARE INSERTED.

PROCEDURE

① INSERT THE WIRES INTO THE APPROPRIATE HOLES IN THE PCB (WIRES CUT AT DIFFERENT LENGTHS TO AID ASSEMBLY).

② WHEN THE WIRES ARE ALL IN PLACE SECURE THE BRACKET TO THE PCB USING THE SCREWS, WASHERS & NUTS SHOWN BELOW.

③ SOLDER & CROP WIRES IN THE USUAL MANNER. INSERT THE CRIMP PINS INTO SOCKET J5 PIN 6 OF RELAY TO PIN 4 OF J5 & PIN 5 TO PIN 1 AS SHOWN BELOW.

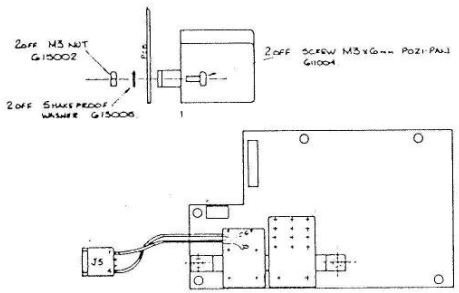

DRAWN W.G. SMITH	CHECKED MSD	DIMENSIONS IN MILLIMETRES	TOLERANCES INCH DIMENSIONS DECIMAL TO 3 PLACES ± .005 DECIMAL TO 2 PLACES ± .010 FRACTIONAL ± 1/64 METRIC DIMENSIONS DECIMAL TO 2 PLACES ± 1mm DECIMAL TO 1 PLACE ± 2mm WHOLE DIMENSIONS ± 4mm UNLESS OTHERWISE STATED ANGULAR ± °	MATERIAL —	datron ELECTRONICS LTD. NORWICH
TRACED	APPROVED	SCALE		FINISH —	TITLE REAR INPUT ASSY
DATE 10 MAY 79	DATE 17 MAY 79	NOT TO BE SCALED			DRAWING No. 400386

DRAWING SIZE A1

SHEET 2 OF 8

DRAWING No.	
430386	
FIRST USED ON	
1061/1071	

THIRD ANGLE PROJECTION

DRAWN IN ACCORDANCE WITH BS 308

ALL BURRS TO BE REMOVED

NOTES

ISS	CHANGES
A	
1	RELEASED TO PRODUCTION 17 MAY 79 W.G.S.
2	ECO 981. B.J. M1 ADDED R11 " R12 " D5 DELETED. 6-11-79
3	ECO 1054. B.J. R12 WAS JOINED BETWEEN J2-6 & M1-14. 2-1-80.
4	ECO 1085 BS-- BETWEEN J4-1 & J5-1 REMOVED. PINS OF J4 & J5 RE-NUMBERED FOR 4 WAY CONNECTORS. JL:— 22.4.80
5	ECO. 1167. 1154, R1 WAS 18K. R10, R14, R16, R18 R20, C4, C5, C6. D5, D6, D7 & Q6 ADDED. JL:— 23.9.80
6	ECO 1199 R10 WAS 12K JR 24.2.81
7	ECO 1328 C4 WAS 6N8F R11 WAS 18K R21 AND C7 ADDED. JR 13.5.82

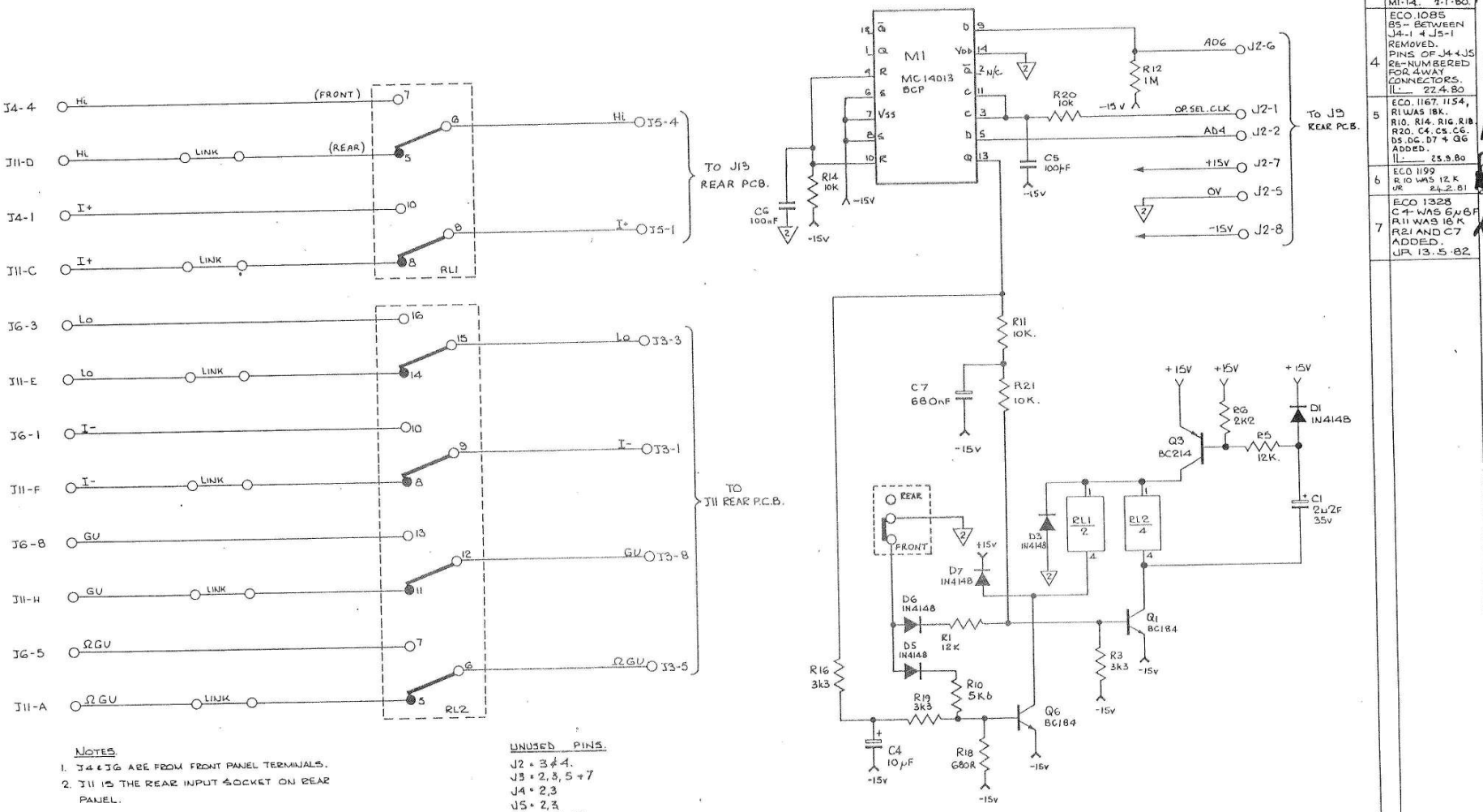

NOTES.

1. J4 & J6 ARE FROM FRONT PANEL TERMINALS.
2. J11 IS THE REAR INPUT SOCKET ON REAR PANEL.

UNUSED PINS.

J2 = 3 & 4.
J3 = 2, 3, 5 & 7
J4 = 2, 3
J5 = 2, 3
J6 = 2, 3 & 7

DRAWN W.G.SMITH	CHECKED	DIMENSIONS IN MILLIMETRES	TOLERANCES ANGULAR ± ½° INCH DIMENSIONS DECIMAL TO 3 PLACES ± .005 DECIMAL TO 2 PLACES ± .010 FRACTIONAL ± 1/64 METRIC DIMENSIONS DECIMAL TO 2 PLACES ± 1mm DECIMAL TO 1 PLACE ± 2mm WHOLE DIMENSIONS ± 4mm UNLESS OTHERWISE STATED	MATERIAL	datron ELECTRONICS LTD. NORWICH.	DRAWING SIZE A2
TRACED	APPROVED	SCALE NOT TO BE SCALED		FINISH	TITLE REAR INPUT CIRCUIT DIAGRAM.	DRAWING No. 430386 SHEET 1 OF 1.
DATE 8 MAY 79	DATE 17 MAY 79					

DRAWING No. 400402

FIRST USED ON 1061/1071

THIRD ANGLE PROJECTION

DRAWN IN ACCORDANCE WITH BS 308

ALL BURRS TO BE REMOVED

NOTES

1. DO NOT FIT R7 FOR 1061 MODELS.

ISS	CHANGES
1	RELEASED TO PROD'N IL 17.5.79
2	ECO 956 + 957 PARTS LIST CHANGES IL 8.10.79
3	ECO. 972, 979, 987, 993, 996. RL2 & RL3 WERE ITT. RELAY WIRE WAS PVC. C11 WAS 120K C18 WAS 0.47 R127 .100K. ADDED. BJ. 25-10-79
4	ECO 999, 1007 PARTS LIST CHANGES R128, C65, C66 + D16 ADDED IL 31.10.79
5	ECO 1010. WIRE T TRIM ASSYS WERE 400379/2 & 400379/5. (NO SHIELD STRETCH AND) BJ. 5-11-79.
6	ECO 1110 & 1100 (QS) C65 & D10 REMOVED D10 REPLACED BY C67 FITTED IN PARALLEL WITH R128. VALUE CHANGES TO PL IL 21.80
7	ECO.1059 C68, C69 ADDED. SCREWS TO SECURE GUARD SHIELD WERE 3 off G11015 IL 24.1.80
8	ECO 1065 R704 WAS 680K 400068 C70 WAS 33nF 105330 ADDED W.G.S. 19 FEB 80
9	ECO. 1082 PARTS LIST CHANGES IL 27.2.80
10	ECO. 1112, 1099, 1113 C71 R150 ADDED J2-4 WAS 605057 P/s LT. CHANGE TO 8 WAY IL 16.4.80
11	ECO. 1133 D17 ADDED. IL 13.6.80
12	ECO. 1160 C72 + R155 ADDED IL 24.9.80
13	ECO. 1190 PARTS LIST CHANGES IL 5.1.81
14	ECO.1201, 1207 C34 & C72 DELETED. R136 ADDED. OTHER PARTS LIST CHANGES IL 9.4.81
15	ECO 1217 U1 WAS 16 WAY SOCKET. JR 19-8-81
16	ECO. 1352 C67, C71 & R150 DELETED. C34, C72, D18 + D19 ADDED. C45 WAS 12pF C46 WAS 6p8F D17 CATHODE WAS SOLDERED D14 ANODE IL 7.9.82
17	ECO. 1425 C75 & C76 ADDED D13 WAS IN4148 R118 WAS 82K R36 WAS 1M2 IL 25.11.82
18	ECO 1446 R121 & R150 DELETED R34, R104 & R105 VALUE CHANGE 6.2 16-2-83
19	ECO. 1589 SLEEVE 590002 ADDED TO D18/D19 IL 6.3.84
20	ECO. 1622, 1626 R19 WAS 120K R101 WAS 220K R136 WAS 27K Q35/Q36 WERE D18/D19 R150 (WASHER) RE-POSITIONED AS WITH D17 IL 2.5.84
21	ECO 1642 R100 WAS 220K NOM E34 + 750K TL1,2,3,4 & NYLATCH NOW FITTED AFTER ATE 67.11.84
22	ECO1730 C77 + Q37 ADDED R129 WAS 2k2 R63 WAS 2k2 R115 WAS 8k2 IL 23.10.84

ALL TEST LINKS TO BE FORMED AS TEST POINTS

NOTE: WIRES OF J2 SOCKET TO BE AS SHOWN.

GUARD SHIELD 450249 TO BE SECURED WITH M3 x 6mm POZIDRIVE SCREWS G11007 3 off. TO M3 HEX STANDOFFS.

R134 CONNECTED IN SERIES WITH C57 + SOLDERED INTO CLOVERLEAF AS SHOWN.

SLEEVE ALL SOLDERED JOINTS WITH HALF PIECE OF 590001

ALL WIRES TO RELAY PINS 7/2 PTFE INSULATED + WHITE 512959.

25mm, 35mm, 50mm, 60

R133 SOLDERED BETWEEN RL3 PINS 7 + 10, LEADS SLEEVED WITH 590001

VIEW ON BASE OF RELAY RL3

BRASS STRIP 85mm LONG 630107 N.B. STRIP SHOULD BE SOLDERED AS CLOSE AS POSSIBLE TO LEFT HAND SIDE OF COPPER 'LAND' (AS SHOWN). ENSURE THAT SOLDER DOES NOT ENCROACH ON AREA AROUND HEX STANDOFF POSITION. STRIP SHOULD ALSO BE 3.0mm FROM EDGE OF BOARD TO CLEAR PCB TRACK

2 off SOLDER TERMINAL 620003

CRIMP TERMINAL (FOR BLANKING ONLY) 605056

WIRE/TERMINAL ASSY. 400379/1

FIT C30 AC60055 EGG AS SHOWN

P.C.B. 410156-4

2 off F.S.V. TERMINAL 602001

NOTE: TL1, 2, 3, 4 AND ALL NYLATCHES TO BE FITTED AFTER ATE.

TEST POINTS & TEST LINKS USE 22 SWG. B.T.C. WIRE 540002.

R7 IS REMOVED WHEN BOARD IS USED IN 1061

MOUNT MG ON 'BREAKAWAY' TERMINAL STRIPS. 602004 - 16 off

1 off 16 WAY RIBBON CABLE ASSY S11005/C. SOLDER END WITHOUT CABLE CLIP TO PCB.

SLEEVE LEADS OF C68/C69/C74/C75/C76 BEFORE SOLDERING. USE SLEEVE 590004 A/R.

MOUNT M3, M4 & M7 ON 16 WAY D.I.L. SOCKET - 3 off 605061

WIRE 110mm PTFE INSULATED 7/0.2 WHITE 512959. PLUS GOLD CRIMP TERMINAL 605057. FITTED AS SHOWN.

8 WAY POLARISED SOCKET 605052

LINK C57 TO C61 & TO R123 VIA CLOVERLEAF TERMINALS USING SLEEVED LINKS 540002/590004

BRASS STRIP 35mm LONG BUTT END OF STRIP TO ADJOINING 85mm STRIP AND SOLDER AS SHOWN

FIT C49, C51, C58, C59, C60 (GLASS CAPS.) TO PCB MOUNTED ON 'THIN END'.

15 off CLOVERLEAF 620005 N.B. TERMINALS SHOULD BE FITTED WITH SOLDER CUPS ON X-Y AXIS, AS SHOWN.

N.B. ENSURE THAT IDENT MARK IS AT TOP OF D11 AS SHOWN

VIEW IN DIRECTION OF ARROW 'B'

LINK PINS 11 & 12 ON M4 540002 (B.T.C. WIRE) SOLDER ON UNDERSIDE.

MOUNT M5 ON 14 WAY D.I.L. SOCKET 6050

SLEEVE LEADS OF C77 AND CENTRE PIN OF Q37 (590004)

NOTE: FIT FS06 AS SHOWN ON DRG. FIT TO92G AS SHOWN WITH FLAT AT TOP

TCR 50G

SLEEVE LEADS OF D17 BEFORE SOLDERING. SLEEVE 590004

3 off M3 STANDOFF 612021 SECURE FROM UNDERSIDE WITH M3x8 P/PAN SCREW G1101G 3 off M3 SHAKEPROOF G13005 3 off

TEST POINT TERMINAL 620007 6 off

SOLDER WIRE ENDS TO SOLDER TAGS & SLEEVE WITH 1/2 PIECE OF 590001

3-48 UNC NUT 615005 2 off M2.5 WASHER 613014 2 off

M3x8 P/PAN SCREW G1106 2 off M3 NUT G15002 2 off M3 SHAKEPROOF G13005 2 off

RELAY BRACKET 459112 2 off

WIRE FROM RL2 PIN 1 = 25mm LG

SOLDER WIRE LINK BETWEEN RELAY COIL TERMINAL 4 PCB AS SHOWN (IN SAME POSITION ON RL2 & RL3. 540002

To J2

VIEW IN DIRECTION OF ARROW 'A' SHOWING ONLY RELAY WIRING

* NYLATCH GROMMET G17011 - 4 off

* NYLATCH PLUNGER G17010 - 4 off N.B. FIT FROM COMPONENT SIDE OF PCB.

SECTION A-A

SLEEVE LINK USING 590004 SLEEVING

CUT THIS TRACK - COMP SIDE OF PCB.

N.B. Q35/Q36 NOT SHOWN IN THIS VIEW. THIS IS TO CLARIFY POSN OF R128 & Q32. WHEN FITTING Q35/Q36 ACROSS Q32 SLEEVE LEADS BEFORE SOLDERING 590004. SEE MAIN VIEW FOR POSN. CUT CENTRE PINS OF Q35/Q36 CLOSE TO BODY OF DEVICE.

DRAWN IL	CHECKED R.W.G.	DIMENSIONS IN MILLIMETRES	TOLERANCES INCH DIMENSIONS DECIMAL TO 1 PLACES ± .005; DECIMAL TO 2 PLACES ± .010; FRACTIONAL ± 1/64; METRIC DIMENSIONS DECIMAL TO 1 PLACE ± 1mm; DECIMAL TO 2 PLACE ± 2mm; WHOLE DIMENSIONS ± 4mm; UNLESS OTHERWISE STATED. ANGULAR ± 1°	MATERIAL AS PARTS LIST	datron ELECTRONICS LTD. NORWICH.		DRAWING SIZE A1
TRACED	APPROVED	SCALE 2:1		FINISH —	TITLE A.C. PCB. ASSY (OPTION 10) 1061/1071	DRAWING No. 400402	SHEET 1 OF 17
DATE 22.8.79	DATE 3.9.79	NOT TO BE SCALED					

DRAWING No. 430402

FIRST USED ON 1061/1071

THIRD ANGLE PROJECTION

DRAWN IN ACCORDANCE WITH BS 308

ALL BURRS TO BE REMOVED

NOTES

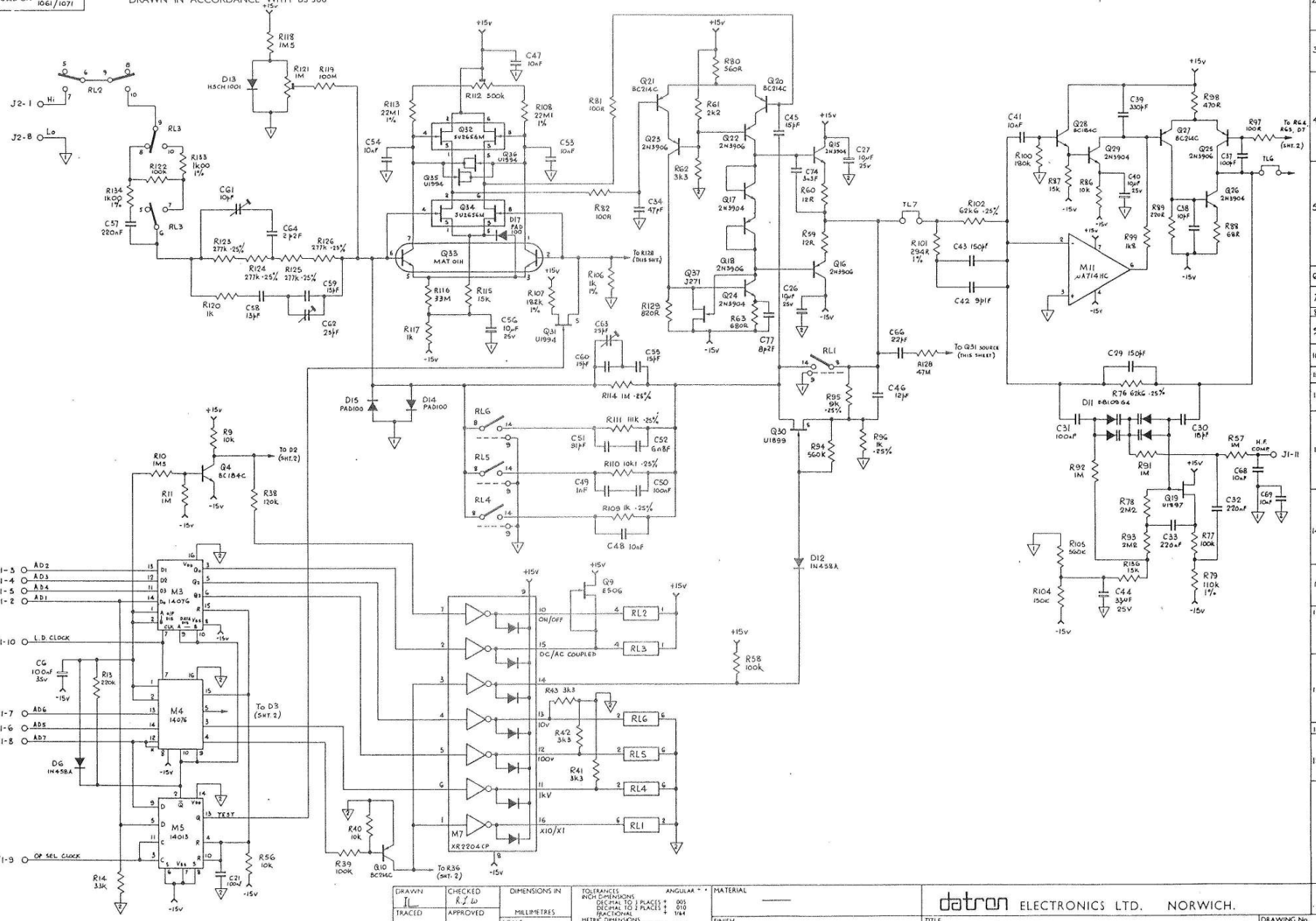

ISS.	CHANGES
1	RELEASED TO PROD^N IL 17.9.79
2	ECO. 956, 957 R10 WAS 220k R11 WAS 18k R13 WAS 33k C6 WAS 680nF SEE ALSO SHEET 2 IL 8.10.79
3	ECO. 993, 996. R11 WAS 120K. R127 100M ADDED D13 WAS OA47 B.J. 24-10-79
4	ECO. 999, 1007 R117 WAS 100R M4/11 & 12 LINKED C44 WAS 1µF C56 WAS 10µF C34 WAS 10µF C46 WAS 2p2F C63 & C66 ADDED R81 WAS 100R R82 WAS 1k R128 ADDED SEE ALSO SHT. 2 IL 1.11.79
5	ECO. 1011, 1016, 1036. C45 WAS 3p3F. C46 WAS 10pF. C34 WAS 22µF TANT. C65 REMOVED. C66 WAS 220pF. R128 WAS 15M. R81, R82 WERE 330R C56 WAS 100µF. D10 REMOVED. C67, R129 ADDED. R104 WAS 10k. R105 WAS 68k. C64 WAS 3p3F. IL 2.1.80
6	ECO. 1058 C68 & C69 ADDED IL 23.1.80
7	ECO 1069 SEE SHEET 2. IL 15.2.80
8	SEE SHEET 2
9	ECO. 1112, 1113 C71, R130, R133, R134 ADD^D SEE ALSO SHEET 2 IL 14.4.80
10	ECO. 1135 D17 ADDED. IL 13.6.80.
11	ECO. 1160 R135 & C72 ADDED
12	ECO. 1190 D11 WAS MUAM-2 C30 WAS 13pF IL 5.1.80
13	ECO. 1201, 1207 C34 & C72 DELETED R136 ADDED C39 WAS 100pF C44 WAS 10µF C45 WAS 10pF C46 WAS 8p2F R79 WAS 110k Q28 WAS 2N3904 IL 8.4.81
14	ECO. 1392 R130, C67, C71 DELETED C34, C74, D18 & D19 ADDED. C45 WAS 12pF. C46 WAS 8p8F. D17 WAS CONNECTED TO Q33 PIN 6. (I.E. D17 CATHODE BUS) IL 8.9.82
15	ECO. 1428 R118 WAS 82k D13 WAS 1N4148 SEE ALSO SHT. 2. IL 25.11.82
16	ECO. 1446. R127 & R138 DELETED R94 WAS 270K R104 - 16K R105 - 62K. B.J. 18-2-83
17	ECO. 1622, 1626 Q35 Q36 WERE D18/D19 RESP. (1N458A) D17 WAS FITTED FROM Q33 PIN 5 TO ▽. R79 WAS 120k R101 WAS 220R R136 WAS 27k IL 2.5.84
18	SEE SHEET 2.
19	ECO. 1730 C77 & Q37 ADDED. R63 WAS 2k2 R115 WAS 8k2 R129 WAS 2k2 IL 23.10.84

DRAWN	CHECKED	DIMENSIONS IN MILLIMETRES	TOLERANCES ANGULAR ± INCH DIMENSIONS DECIMAL TO 3 PLACES ± .005 DECIMAL TO 2 PLACES ± .010 FRACTIONAL ± 1/64 METRIC DIMENSIONS DECIMAL TO 2 PLACES ± 1mm DECIMAL TO 1 PLACE ± 2mm WHOLE DIMENSIONS ± 4mm UNLESS OTHERWISE STATED	MATERIAL —	datron ELECTRONICS LTD. NORWICH.	DRAWING SIZE A1
TRACED	APPROVED	SCALE —		FINISH —	TITLE 1061/1071 AC - PREAMP	DRAWING No. 430402
DATE 20 8 79	DATE 3.9.79	NOT TO BE SCALED				SHEET 1 OF 2

DRAWING No. 430402.
FIRST USED ON

THIRD ANGLE PROJECTION

DRAWN IN ACCORDANCE WITH BS 308

ALL BURRS TO BE REMOVED

NOTES

1. RESISTOR R7 IS NOT FITTED ON A.C. ASSEMBLIES USED IN 1061's INSTRUMENTS.

ISS	CHANGES
1	RELEASED TO PRODN IL 17.9.79
2	ECO 956 C2 WAS 680nF IL 8.10.79
3	SEE SHT 1. 24-10-79 BJ
4	R33 WAS 10K R34 WAS 1M8 D16 ADDED IL 1.11.79
5	ECO. 1011, 1016, 1036 R26 WAS 180K R7 WAS 1M. IL 2.1.80
6	SEE SHEET 1
7	ECO 1069 R70 WAS 680R R71 WAS 680R C70 ADDED IL 14.2.80
8	ECO. 1082. R27 WAS 680K R36 WAS 820K R34 WAS 1M IL 27.2.80
9	ECO. 1172 R50 WAS 100R IL 14.4.80
10	SEE SHEET 1
11	SEE SHEET 1
12	SEE SHEET 1
13	SEE SHEET 1
14	SEE SHEET 1
15	ECO. 1425 R36 WAS 1M2. C75 & C76 ADDED. SEE ALSO SHT. 1 IL 25.11.82
16	SEE SHEET 1
17	SEE SHEET 1
18	ECO 1048 R36 WAS 750K B.J. 11th JUNE 84.
19	SEE SHEET 1

DRAWN	CHECKED	DIMENSIONS IN	TOLERANCES	MATERIAL
IL	RJ 10	MILLIMETRES	INCH DIMENSIONS: DECIMAL TO 1 PLACES ± .065; DECIMAL TO 2 PLACES ± .010; FRACTIONAL ± 1/64; METRIC DIMENSIONS: DECIMAL TO 2 PLACES ± 1mm; DECIMAL TO 1 PLACE ± 2mm; WHOLE DIMENSIONS ± 4mm; UNLESS OTHERWISE STATED; ANGULAR ± °	
TRACED	APPROVED	SCALE		FINISH
DATE 20 8 79	DATE 3.9.79	NOT TO BE SCALED		

datron ELECTRONICS LTD. NORWICH.

TITLE 1061/1071 A.C. RMS SECTION.

DRAWING SIZE A1

DRAWING No. 430402

SHEET 2 of 2

DRAWING No.	
400427	
FIRST USED ON	

THIRD ANGLE PROJECTION

DRAWN IN ACCORDANCE WITH BS 308

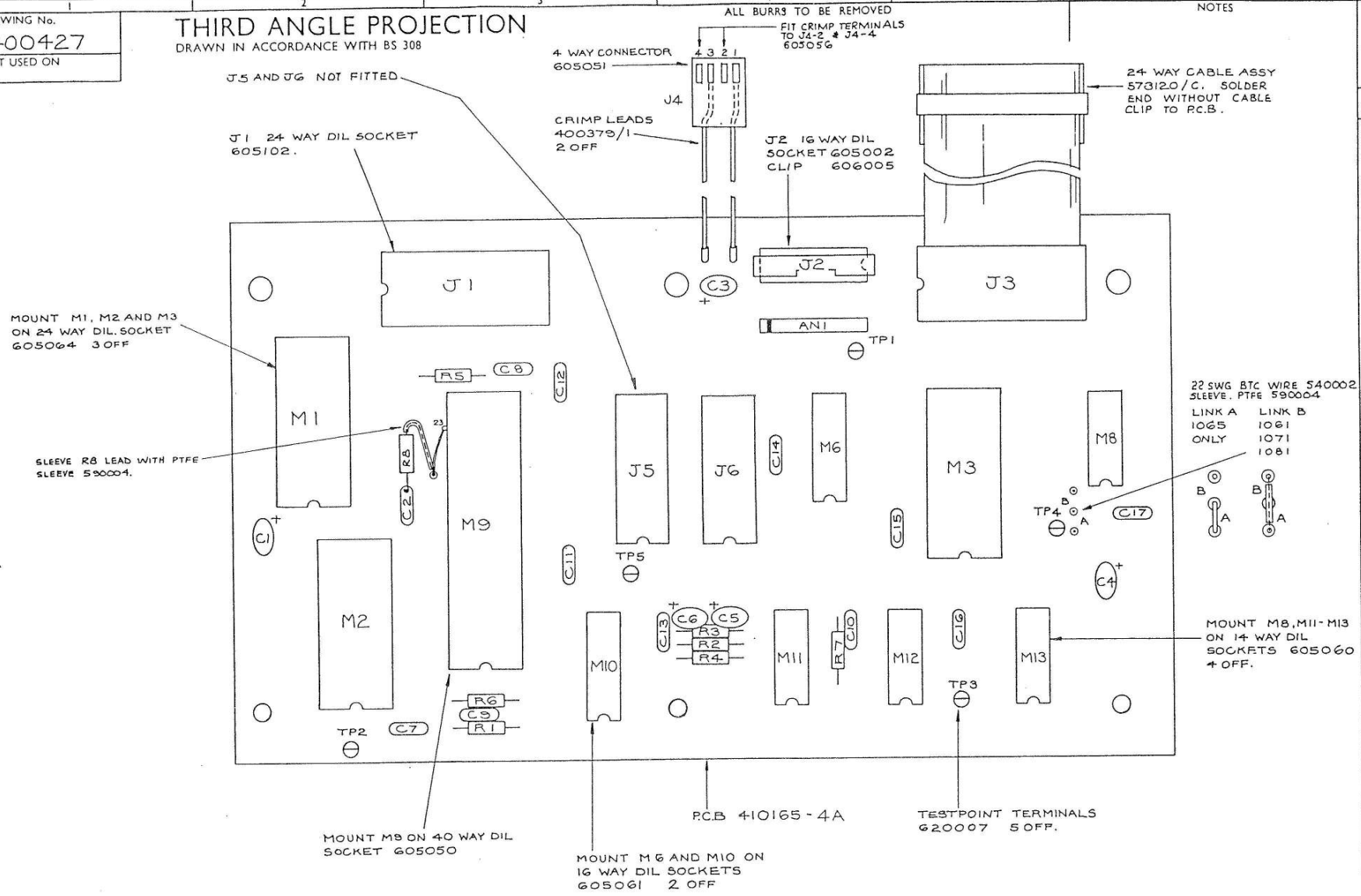

ISS.	CHANGES
9	ECO. 1538.1588 3 NYLATCHES REMOVED. P.C.B WAS 1552 C7 WAS 10µF TANT C2 WAS 10nF CD. C11-C17 ADDED. IL 28.2.84
10	ECO 1651 R8 ADDED. BJ. 26-7-84.

DRAWN JR	DATE 5·10·83	DIMENSIONS IN MILLIMETRES	METRIC DIMENSIONS ANGULAR ± ½° DECIMAL TO 2 PLACES ± ·1mm DECIMAL TO 1 PLACE ± ·2mm WHOLE DIMENSIONS ± ·4mm UNLESS OTHERWISE STATED	MATERIAL ——	datron ELECTRONICS LTD. NORWICH.	DRAWING SIZE A2
CHKD.	DATE	SCALE 2:1 NOT TO BE SCALED		FINISH ——	TITLE IEEE P.C.B ASSY 1065 1061 1071 1081	DRAWING No. 400427 SHEET 1 OF 5
APPD.	DATE					

J.W. 2042

DRAWING No. 430427

FIRST USED ON 1065

THIRD ANGLE PROJECTION

DRAWN IN ACCORDANCE WITH BS 308

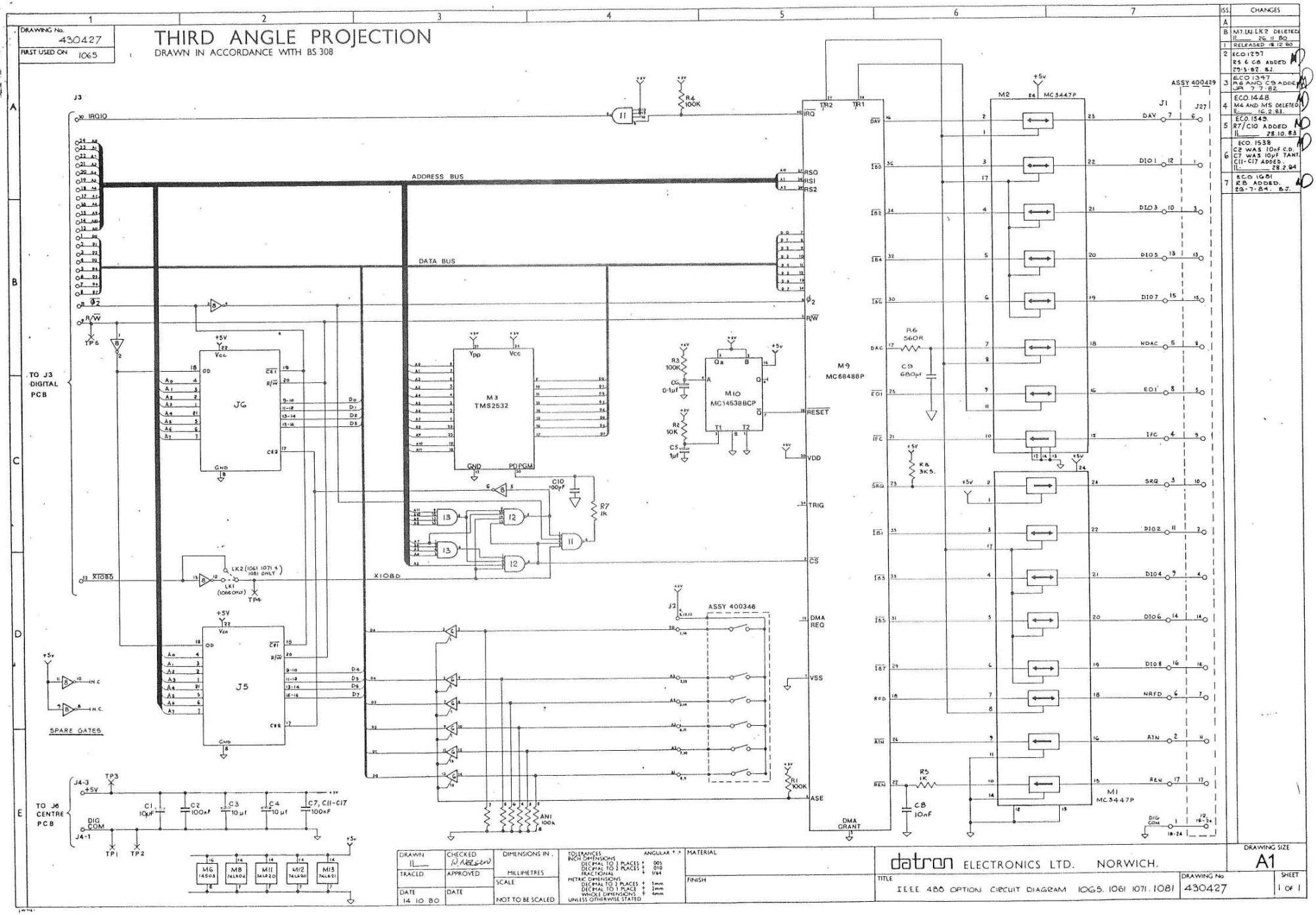

ISS.	CHANGES
A	
B	M7,M9 LK2 DELETED II 26 11 80
1	RELEASED 18 12 80
2	ECO 1297 R5 & C8 ADDED 23-3-82. BJ.
3	ECO 1347 R6 AND C9 ADDED JA 7-7-82
4	ECO 1448 M4 AND M5 DELETED II 16.2.83.
5	ECO 1549. R7/C10 ADDED II 28.10.83
6	ECO. 1538 C2 WAS 10nF C.D. C7 WAS 10μF TANT. C11-C17 ADDED. II 28.2.84
7	ECO 1681 R8 ADDED. 20-7-84. BJ.

DRAWN II	CHECKED D.Nelson	DIMENSIONS IN MILLIMETRES	MATERIAL
TRACED	APPROVED	SCALE NOT TO BE SCALED	FINISH
DATE 14 10 80	DATE		

TOLERANCES UNLESS OTHERWISE STATED: INCH DIMENSIONS DECIMAL TO 3 PLACES ± .005; DECIMAL TO 2 PLACES ± .010; FRACTIONAL ± 1/64; METRIC DIMENSIONS DECIMAL TO 3 PLACES ± 1mm; DECIMAL TO 1 PLACE ± 2mm; WHOLE DIMENSIONS ± 4mm; ANGULAR ± °

datron ELECTRONICS LTD. NORWICH.

TITLE: IEEE 488 OPTION CIRCUIT DIAGRAM 1065. 1061 1071. 1081

DRAWING No. 430427

DRAWING SIZE A1

SHEET 1 OF 1

DRAWING No 400297
FIRST USED ON 1061/71

THIRD ANGLE PROJECTION

DRAWN IN ACCORDANCE WITH BS 308

ALL BURRS TO BE REMOVED

NOTES

ISS.	CHANGES
G	—
H	NEW MARK PCB #7 14-8-78 MD
I	RELEASED TO PRODN 20-9-78
J	ECO 867 PCB UPDATE BJ 11-6-79 MD

USE THE GOLD 4 EIGHT ANGLED PIN ASSY (PART NO 604035). 12 OFF.
PLACED TOGETHER TO MAKE UP THE REQUIRED AMOUNT OF CONTACTS (SHOWN BELOW).
REMOVE PINS IN PLACES SHOWN BY BLACK DOTS.

IMPORTANT

2 OFF. AMP PINS (PART No 604036) MUST BE AFFIXED FIRST.
ENSURE ALL PINS ARE SEATED TIGHT & FLAT TO P.C.B. BEFORE SOLDERING.

NOTE. PINS ARE HELD TOGETHER BY A PLASTIC STRIP. THIS STRIP IS TO BE CUT TO SUIT THE AMOUNT OF PINS REQUIRED.

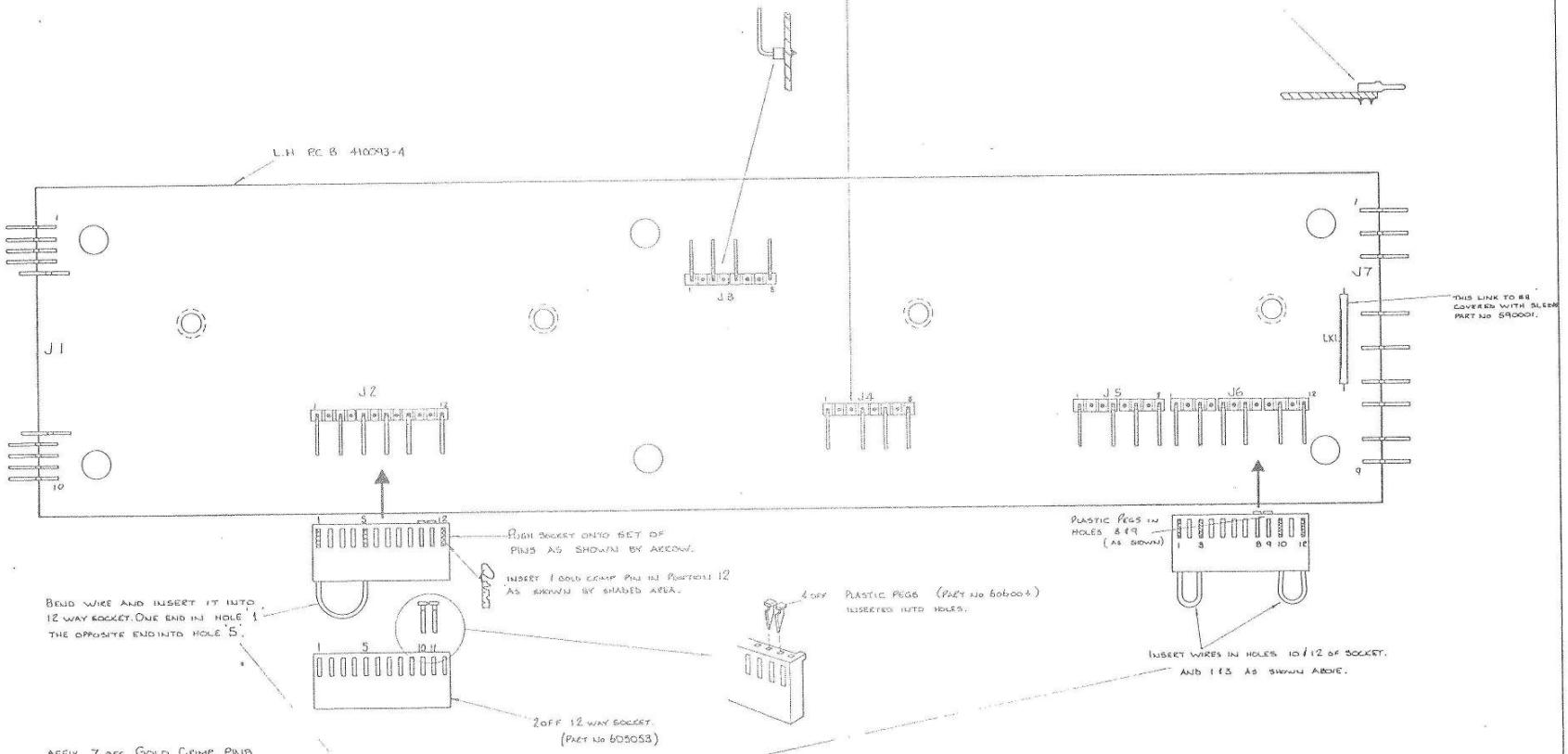

DRAWN	CHECKED	DIMENSIONS IN	TOLERANCES	MATERIAL
B.J		MILLIMETRES	INCH DIMENSIONS ANGULAR ° ' DECIMAL TO 1 PLACES ± .005 DECIMAL TO 2 PLACES ± .010 FRACTIONAL ± 1/64	
TRACED	APPROVED	SCALE 2:1 NOT TO BE SCALED	METRIC DIMENSIONS DECIMAL TO 2 PLACES ± 1mm DECIMAL TO 1 PLACE ± 2mm WHOLE DIMENSIONS ± 4mm UNLESS OTHERWISE STATED	FINISH
DATE 21-4-78	DATE			

datron ELECTRONICS LTD. NORWICH.

DRAWING SIZE A1

TITLE 1061/71/81 L.H. P.C.B. ASSEMBLY

DRAWING No. 400297

SHEET 1 OF

DRAWING No 400297
FIRST USED ON 1061/71

THIRD ANGLE PROJECTION

DRAWN IN ACCORDANCE WITH BS 308

ALL BURRS TO BE REMOVED

NOTES

ISS.	CHANGES
G	—
H	NEW MARK PCB #7 14-8-78 MD
I	RELEASED TO PRODN 20-9-78
J	ECO 867 PCB UPDATE BJ 11-6-79 MD

USE THE GOLD 4 EIGHT ANGLED PIN ASSY (PART NO 604035). 12 OFF.
PLACED TOGETHER TO MAKE UP THE REQUIRED AMOUNT OF CONTACTS (SHOWN BELOW).
REMOVE PINS IN PLACES SHOWN BY BLACK DOTS.

IMPORTANT

2 OFF. AMP PINS (PART No 604036) MUST BE AFFIXED FIRST.
ENSURE ALL PINS ARE SEATED TIGHT & FLAT TO P.C.B. BEFORE SOLDERING.

NOTE. PINS ARE HELD TOGETHER BY A PLASTIC STRIP. THIS STRIP IS TO BE CUT TO SUIT THE AMOUNT OF PINS REQUIRED.

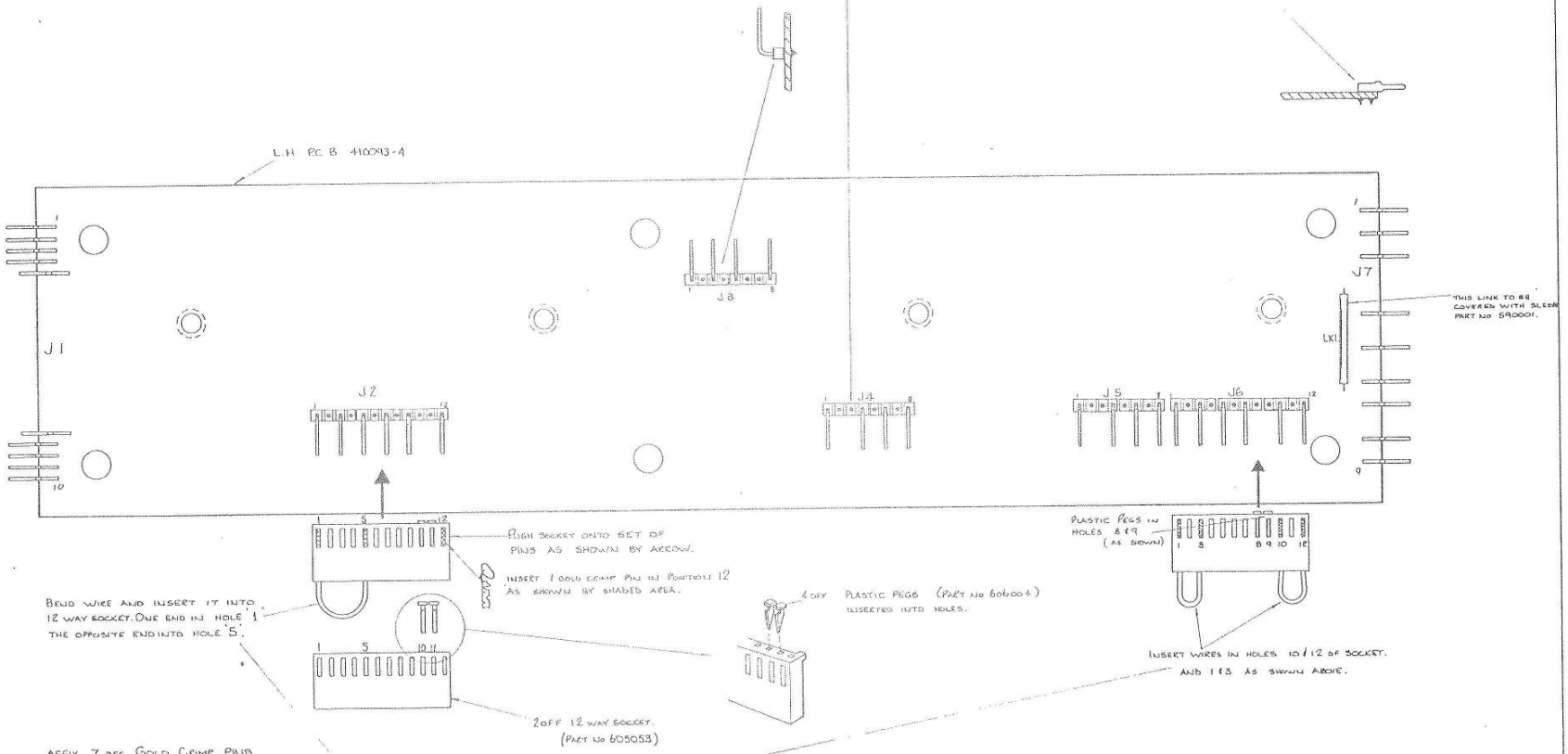

DRAWN	CHECKED	DIMENSIONS IN	TOLERANCES	MATERIAL
B.J		MILLIMETRES	INCH DIMENSIONS ANGULAR ° ' DECIMAL TO 1 PLACES ± .005 DECIMAL TO 2 PLACES ± .010 FRACTIONAL ± 1/64	
TRACED	APPROVED	SCALE 2:1 NOT TO BE SCALED	METRIC DIMENSIONS DECIMAL TO 2 PLACES ± 1mm DECIMAL TO 1 PLACE ± 2mm WHOLE DIMENSIONS ± 4mm UNLESS OTHERWISE STATED	FINISH
DATE 21-4-78	DATE			

datron ELECTRONICS LTD. NORWICH.

DRAWING SIZE A1

TITLE 1061/71/81 L.H. P.C.B. ASSEMBLY

DRAWING No. 400297

SHEET 1 OF

DRAWING No 400297
FIRST USED ON 1061/71

THIRD ANGLE PROJECTION

DRAWN IN ACCORDANCE WITH BS 308

ALL BURRS TO BE REMOVED

NOTES

ISS.	CHANGES
G	—
H	NEW MARK PCB #7 14-8-78 MD
I	RELEASED TO PRODN 20-9-78
J	ECO 867 PCB UPDATE BJ 11-6-79 MD

USE THE GOLD 4 EIGHT ANGLED PIN ASSY (PART NO 604035). 12 OFF.
PLACED TOGETHER TO MAKE UP THE REQUIRED AMOUNT OF CONTACTS (SHOWN BELOW).
REMOVE PINS IN PLACES SHOWN BY BLACK DOTS.

IMPORTANT

2 OFF. AMP PINS (PART No 604036) MUST BE AFFIXED FIRST.
ENSURE ALL PINS ARE SEATED TIGHT & FLAT TO P.C.B. BEFORE SOLDERING.

NOTE. PINS ARE HELD TOGETHER BY A PLASTIC STRIP. THIS STRIP IS TO BE CUT TO SUIT THE AMOUNT OF PINS REQUIRED.

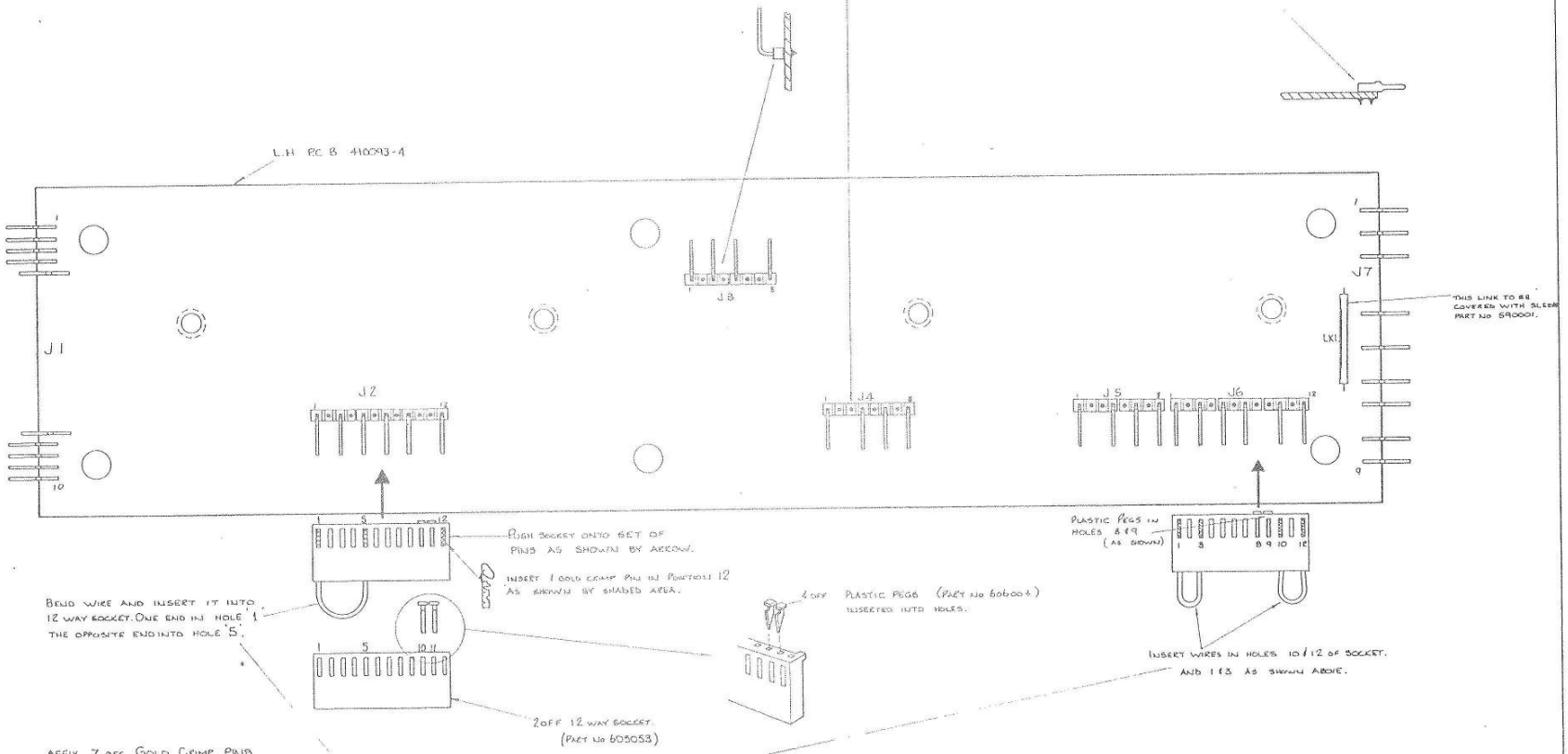

DRAWN	CHECKED	DIMENSIONS IN	TOLERANCES	MATERIAL
B.J		MILLIMETRES	INCH DIMENSIONS ANGULAR ° ' DECIMAL TO 1 PLACES ± .005 DECIMAL TO 2 PLACES ± .010 FRACTIONAL ± 1/64	
TRACED	APPROVED	SCALE 2:1 NOT TO BE SCALED	METRIC DIMENSIONS DECIMAL TO 2 PLACES ± 1mm DECIMAL TO 1 PLACE ± 2mm WHOLE DIMENSIONS ± 4mm UNLESS OTHERWISE STATED	FINISH
DATE 21-4-78	DATE			

datron ELECTRONICS LTD. NORWICH.

DRAWING SIZE A1

TITLE 1061/71/81 L.H. P.C.B. ASSEMBLY

DRAWING No. 400297

SHEET 1 OF

DRAWING No. 400552

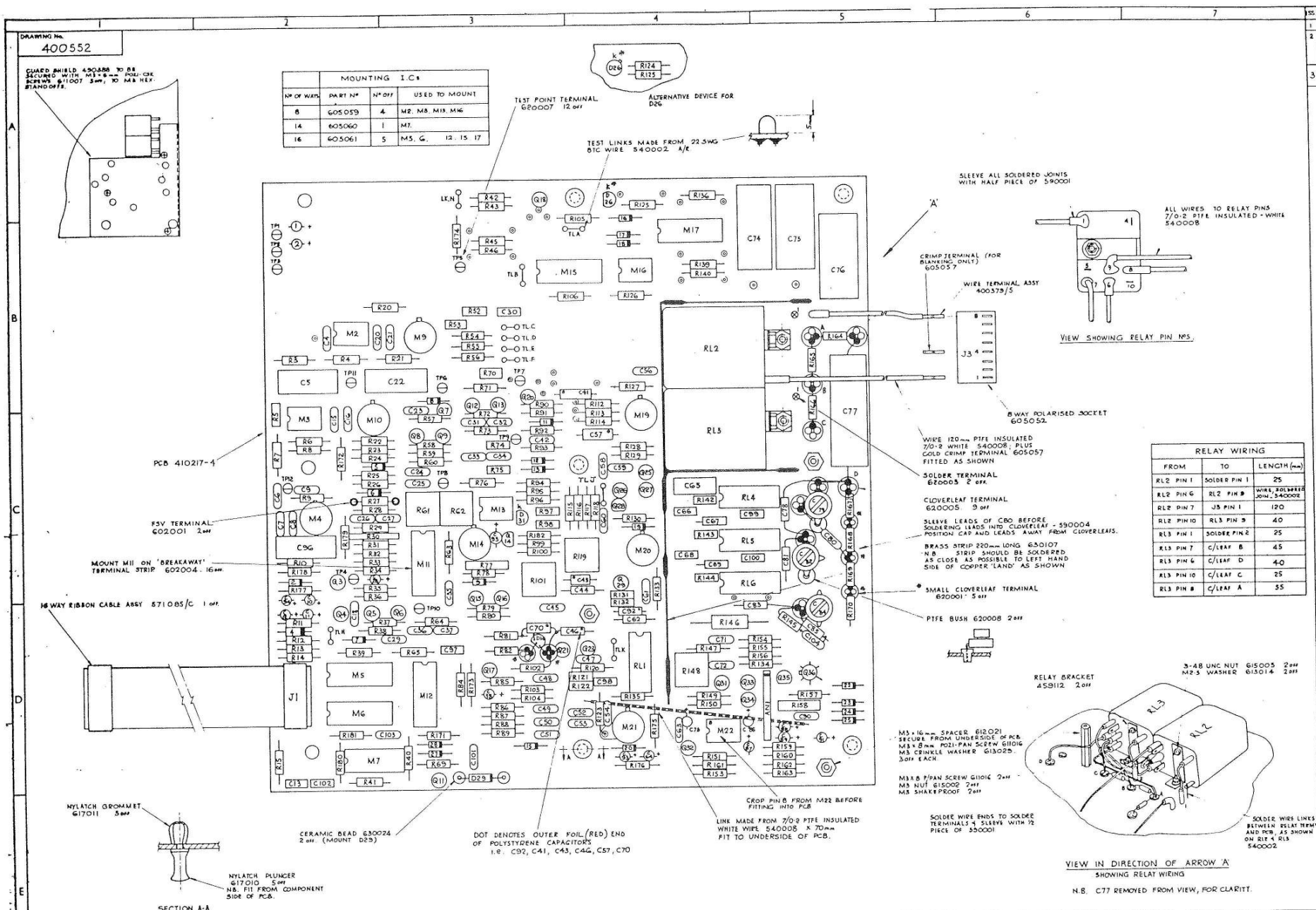

MOUNTING I.Cs			
Nº OF WAYS	PART Nº	Nº OFF	USED TO MOUNT
8	605059	4	M2, M8, M13, M16
14	605060	1	M7.
16	605061	5	M5, 6, 12, 15, 17

RELAY WIRING		
FROM	TO	LENGTH (mm)
RL2 PIN 1	SOLDER PIN 1	25
RL2 PIN 6	RL2 PIN 9	WIRE, SOLDERED JOIN - 540002
RL2 PIN 7	J3 PIN 1	120
RL2 PIN 10	RL3 PIN 9	40
RL3 PIN 1	SOLDER PIN 2	25
RL3 PIN 7	C/LEAF B	45
RL3 PIN 6	C/LEAF D	40
RL3 PIN 10	C/LEAF C	25
RL3 PIN 8	C/LEAF A	55

SS.	CHANGES
1	RELEASED 13.9.84
2	ECO 1700 & 1702 R145 & C104 ADDED PCB Nº 15 155.3 RP 14.9.84
3	ECO 1884 C54 WAS Inf CER DISC 24.1.85

datron ELECTRONICS LIMITED NORWICH

DRAWN	DATE 4.4.84	DIMENSIONS IN MILLIMETRES	TOLERANCES DECIMAL TO 2 PLACES ± 1mm DECIMAL TO 1 PLACE ± 2mm WHOLE DIMENSIONS ± 4mm ANGULAR ± ½° UNLESS OTHERWISE STATED	MATERIAL	ASSY DRG & PARTS LIST 400552	TITLE 1061A/62 AC PCB ASSY (OP 12)	DRAWING No. 400552
CHECKED L.O.G.	DATE 10-4-84	SCALE 2:1		FINISH	CIRCUIT DIAGRAM 430552		
APPD	DATE 13-9-84	NOT TO BE SCALED	FIRST ANGLE PROJECTION		CHECK PROCEDURE 460552		SHEET 1 OF 20
					CHECK LIST 470552		

DRAWING No. 430552

BIAS CURRENT

OFFSET NULL AMPLIFIER

AC PRE-AMP

ISS	CHANGES
A	7.7.83
B	29.3.84
1	RELEASED 13.9.84
2	ECO.1702 C104 & R145 ADDED A/F 14.9.84
3	ECO.1824 C54 WAS 1nF CER DISC. IL 24.1.85

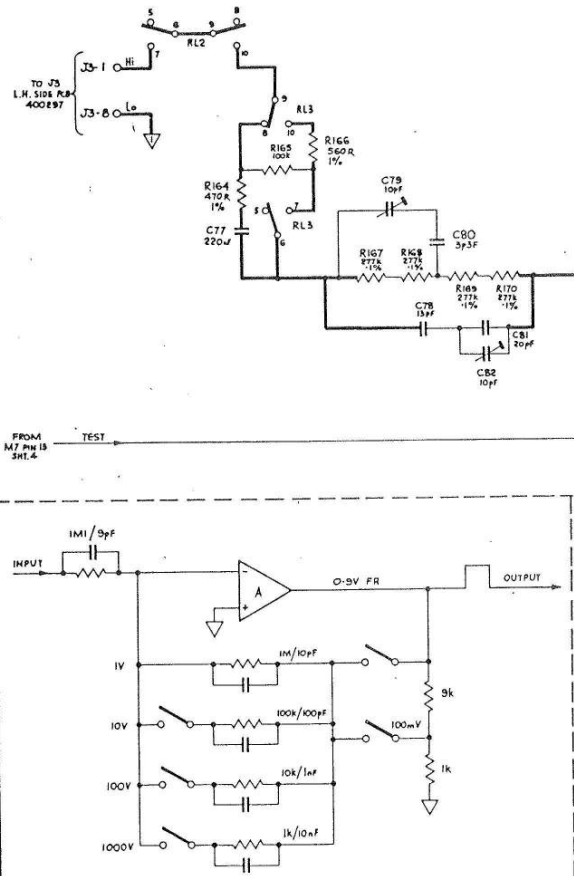

SIMPLIFIED SCHEMATIC

NOTE : 1. INCREASE C71 TO REDUCE READING AT 1MHz ON 1V AND 10V RANGES.

2. INCREASE C47 TO REDUCE READING AT 1MHz ON 100mV RANGE.

DRAWN IL	DATE 7.7.83.	DIMENSIONS IN MILLIMETRES	TOLERANCES DECIMAL TO 2 PLACES ± 1mm; DECIMAL TO 1 PLACE ± 2mm; WHOLE DIMENSIONS ± 4mm; ANGULAR ± 1°
CHECKED L.O.G.	DATE 11-7-83	SCALE —	UNLESS OTHERWISE STATED
APP AS	DATE 13.9.84	NOT TO BE SCALED	FIRST ANGLE PROJECTION

MATERIAL —

FINISH —

ASSY DRG & PARTS LIST	400552
CIRCUIT DIAGRAM	
CHECK PROCEDURE	460552
CHECK LIST	470552

TITLE: 1061/62 AC PRE-AMP (OPTION 12)

datron ELECTRONICS LIMITED NORWICH

DRAWING No. 430552

SHEET 1 OF 4

DRAWING No. 430552

ISS	CHANGES
A	7.7.83
B	25 3 84
1	RELEASED 13.9.84
2	SEE SHT 1
3	SEE SHT. 1

COMPENSATION STAGE

H.F. AUTOCAL

PRECISION HALF WAVE RECTIFIER

LOG AMPLIFIER

H.F. FLAG (>2kHz)

DRAWN L.	DATE 8.7.83	DIMENSIONS IN MILLIMETRES	TOLERANCES DECIMAL TO 2 PLACES ± 1mm; DECIMAL TO 1 PLACE ± 2mm; WHOLE DIMENSIONS ± 4mm; ANGULAR ± 1°	MATERIAL	ASSY DRG & PARTS LIST 400552
CHECKED L.O.G.	DATE 11-7-83	SCALE	UNLESS OTHERWISE STATED	FINISH	CIRCUIT DIAGRAM
APP	DATE 13.9.84	NOT TO BE SCALED	FIRST ANGLE PROJECTION		CHECK PROCEDURE 460552
					CHECK LIST 470552

TITLE: 1061/62 A.C. (OPTION 12)

datron ELECTRONICS LIMITED NORWICH

DRAWING No. 430552

SHEET 2 OF 4

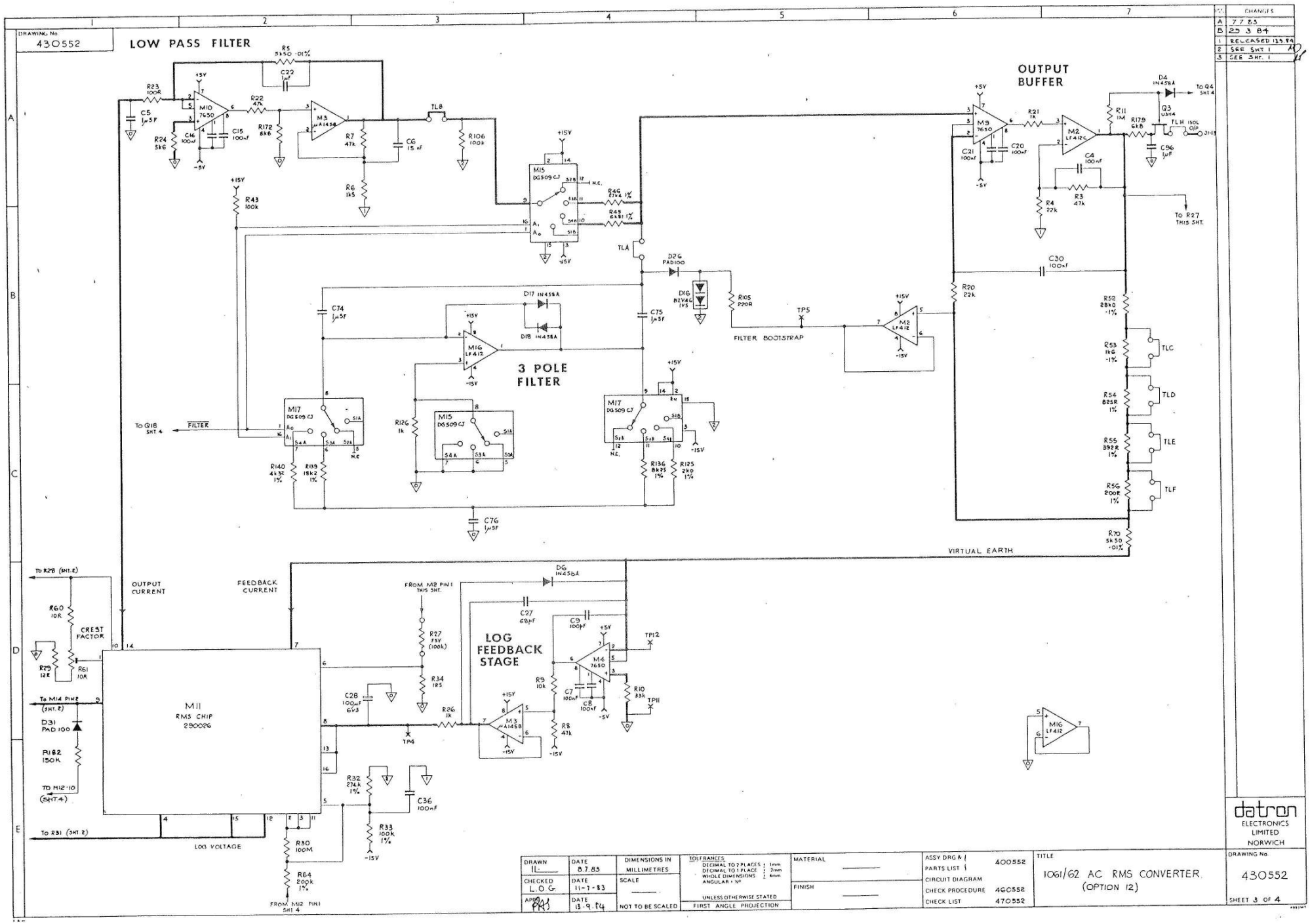
DRAWING No. 430552
LOW PASS FILTER
OUTPUT BUFFER
3 POLE FILTER
LOG FEEDBACK STAGE
FILTER BOOTSTRAP
VIRTUAL EARTH
OUTPUT CURRENT
FEEDBACK CURRENT
CREST FACTOR
LOG VOLTAGE
M11 RMS CHIP 290026
M10 7650
M3 μA1458
M15 DG509 CJ
M16 LF412
M17 DG509 CJ
M9 7650
M2 LF412C
M4 7650
M3 μA1458
M16 LF412
TLA
TLB
TLC
TLD
TLE
TLF
TP5
TP4
TP11
TP12
TO Q18 SHT 4
TO Q4 SHT 4
TO R27 THIS SHT.
TO R28 (SHT. 2)
TO M14 PIN 2 (SHT. 2)
TO M12-10 (SHT. 4)
TO R31 (SHT. 2)
FROM M12 PIN 1 SHT 4
FROM M2 PIN 1 THIS SHT.
FILTER
CHANGES
A 7 7 83
B 25 3 84
1 RELEASED 13.9.84
2 SEE SHT 1
3 SEE SHT. 1
datron ELECTRONICS LIMITED NORWICH
DRAWN 11
DATE 8.7.83
CHECKED L.O.G.
DATE 11-7-83
APPD
DATE 13.9.84
DIMENSIONS IN MILLIMETRES
SCALE
NOT TO BE SCALED
TOLERANCES
DECIMAL TO 2 PLACES ± 1mm
DECIMAL TO 1 PLACE ± 2mm
WHOLE DIMENSIONS ± 4mm
ANGULAR ± ½°
UNLESS OTHERWISE STATED
FIRST ANGLE PROJECTION
MATERIAL
FINISH
ASSY DRG & PARTS LIST 400552
CIRCUIT DIAGRAM
CHECK PROCEDURE 460552
CHECK LIST 470552
TITLE
1061/62 AC RMS CONVERTER (OPTION 12)
DRAWING No. 430552
SHEET 3 OF 4

DRAWING No. 430552

ISS	CHANGES
A	7.7.83
B	25 3 84
1	RELEASED 11.9.84
2	SEE SHT 1
3	SEE SHT. 1

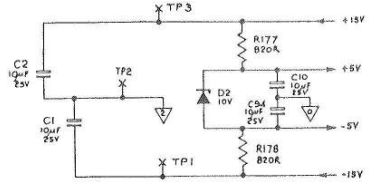

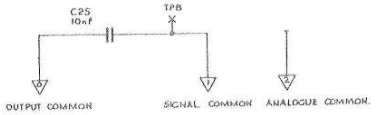

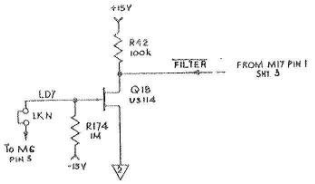

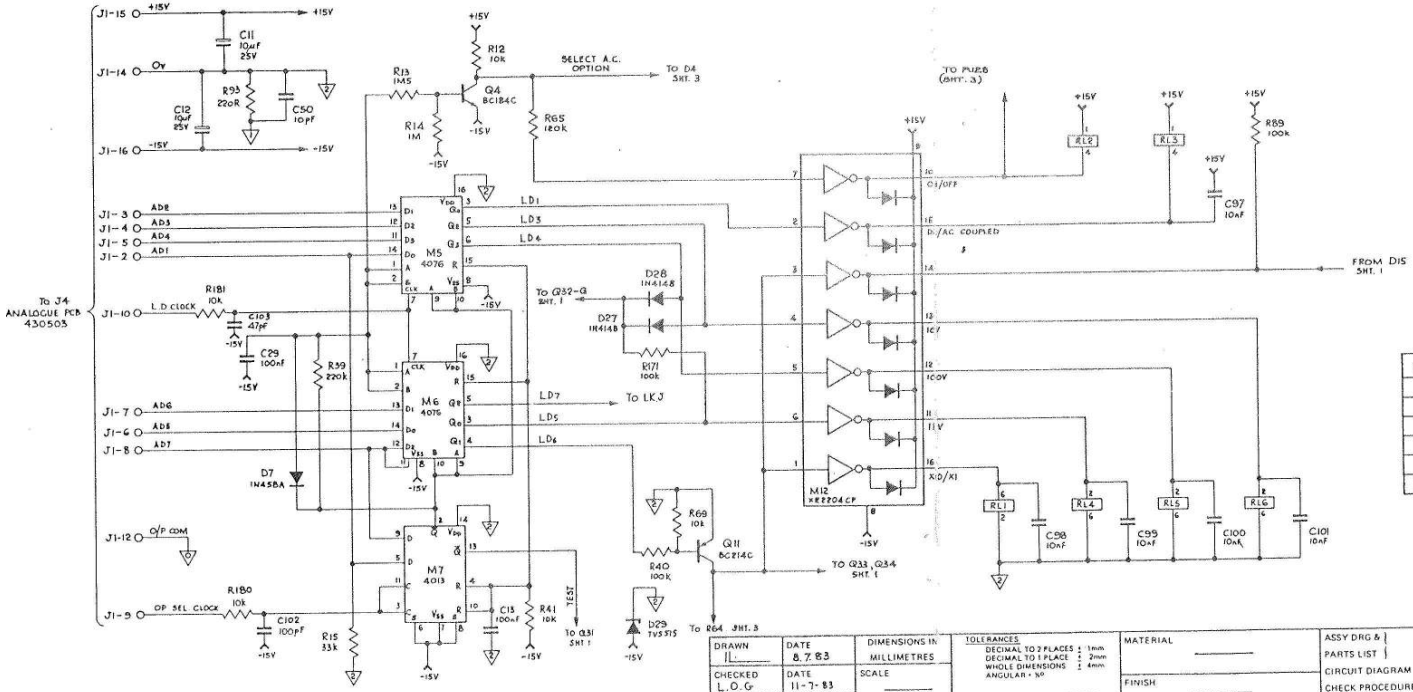

RANGE	LD_1	LD_3	LD_4	LD_5	LD_6	LD_7
0·1V	X	0	0	0	1	X
1V	X	0	0	0	0	X
10V	X	1	0	0	0	X
100V	X	0	1	0	0	X
1000V	X	0	0	1	0	X
FILTER	X	X	X	X	X	1

DRAWN	DATE 8.7.83	DIMENSIONS IN MILLIMETRES	TOLERANCES DECIMAL TO 2 PLACES ± 1mm; DECIMAL TO 1 PLACE ± 2mm; WHOLE DIMENSIONS ± 4mm; ANGULAR ± 1°
CHECKED L.O.G	DATE 11-7-83	SCALE —	UNLESS OTHERWISE STATED
APPD MJS	DATE 13.9.84	NOT TO BE SCALED	FIRST ANGLE PROJECTION

MATERIAL —

FINISH —

ASSY DRG & PARTS LIST	400552
CIRCUIT DIAGRAM	430552
CHECK PROCEDURE	460552
CHECK LIST	470552

TITLE: 1061/62 AC RANGING (OPTION 12)

datron ELECTRONICS LIMITED NORWICH

DRAWING No. 430552

SHEET 4 OF 4